It is expected that a Quorum of the Board of Public Works, Park Board, Administration Committee, and/or Common Council may attend this meeting: (although it is not expected that any official action of any of those bodies will be taken)

CITY OF MENASHA
PLAN COMMISSION
Council Chambers
140 Main Street, Menasha

May 19, 2009

3:30 PM

AGENDA

INFORMAL PUBLIC HEARING:

1. *Proposed Amendment to Title 13, Article F of the Code of Ordinance Related to the Regulation of Signs –*
   - *Expand and Clarify Signage Requirement Related to the C-2 Central Business District*
   - *Clarify Permissible Sign Use and Definition of "Electronic Message Centers"*
   - *Establish New Criteria for Off-Premises Signage for Business Parks, Office Parks and Similar Development*
2. *Create Ordinance for Proposing and Enacting Amendments to the City of Menasha Comprehensive Plan*
3. *Create Exception to Setback Requirements Prohibiting the Placement of Structures Within 10 Feet of a Dedicated Drainage Easement*

A. CALL TO ORDER

B. ROLL CALL/EXCUSED ABSENCES

C. MINUTES TO APPROVE
   1. Minutes of the April 7, 2009 Plan Commission Meeting

D. PUBLIC COMMENT ON ANY ITEM OF CONCERN ON THIS AGENDA
   Five (5) minute time limit for each person

E. DISCUSSION
   1. None

F. ACTION ITEMS
   1. Release of Road Reservation – 921 Midway Road
   2. Site Plan Review – 23 Main Street – Jitters
   3. Proposed Amendment to Title 13, Article F Related to the Regulation of Signs
   4. Proposed Amendment to Title 2, Chapter 4 Related to the Adoption and Amendment of the Comprehensive Plan
   5. Proposed Amendment to Title 13, Article B Related to the Height, Setback and Area Exceptions

G. ADJOURNMENT

Menasha is committed to its diverse population. Our Non-English speaking population or those with disabilities are invited to contact the Community Development Department at 967-3650 at least 24-hours in advance of the meeting so special accommodations can be made.

CITY OF MENASHA
Plan Commission
Third Floor Council Chambers
140 Main Street, Menasha

April 7, 2009

3:30 PM

MINUTES

A. CALL TO ORDER

The meeting was called to order at 3:30 p.m. by Mayor Merkes.

B. ROLL CALL/EXCUSED ABSENCES

PLAN COMMISSION MEMBERS PRESENT: Mayor Merkes, Ald. Benner, DPW Radtke and Commissioners Cruickshank and Schmidt

PLAN COMMISSION MEMBERS EXCUSED: Norm Sanders and Dick Sturm

OTHERS PRESENT: CDD Keil and Rob Sprangers

C. MINUTES TO APPROVE

1. Minutes of the March 17, 2009 Plan Commission Meeting.
    a. Moved by DPW Radtke, seconded by Comm. Cruickshank to approve the March 17, 2009 Plan Commission meeting minutes. The motion carried.

D. PUBLIC COMMENT ON ANY ITEM OF CONCERN ON THIS AGENDA

1. No one spoke.

E. COMMUNICATIONS

1. None

F. DISCUSSION

1. Potential Rezoning of 320 Konemac Street – I-1 to C-1.
    a. Owner is proposing to convert the portion of the building previously occupied by a beauty shop into apartments. A zoning change is required because residential use is not permitted under the I-1 zoning.
    b. Commissioners discussed the following:
        I. Zoning of neighboring properties.
        II. Amount and location of on-site parking.
        III. Access to parking areas.
        IV. Permissibility of retaining carpentry shop/storage space.

DRAFT

c. It was the consensus of the Commission that the owner should work with Community Development to prepare a concept plan for the site and bring this matter back to the Plan Commission for further review.

G. **ACTION ITEMS**

1. Create Ordinance for Proposing and Enacting Amendments to the City of Menasha Comprehensive Plan
    a. This item as previously presented to the Plan Commission.
    b. Moved by Ald. Benner, seconded by DPW Radtke to recommend approval of "An Ordinance Relating to Comprehensive Plan Amendments" with the following changes:
        I. Establishing the month of November as the start date for initiating the annual comprehensive plan review under Section (c)(1).
        II. Removing the word "or" at the end of Section (e)(1)(a)(i, ii, and iii) and Section (e)(z)(a)(i, ii and iii).
    c. The motion carried.

H. **ADJOURNMENT**

Moved by Comm. Schmidt, seconded by Ald. Benner to adjourn at 4:32 p.m. The motion carried.

Minutes respectfully submitted by Greg Keil, Community Development Director

DRAFT

MIDWAY PL.
MIDWAY RD. (COUNTY RD. AP)
KENWOOD DR.
PARKSIDE DR.
WITTMANN DR.
TWELVE OAKS LN.
LN.
PARK

CERTIFIED SURVEY MAP NO. 2308

CERTIFIED SURVEY MAP NO. 1199 and part of the Northwest 1/4 of the Northeast 1/4 of Section 11, Township 20 North, Range 17 East, City of Menasha, Winnebago County, Wisconsin.

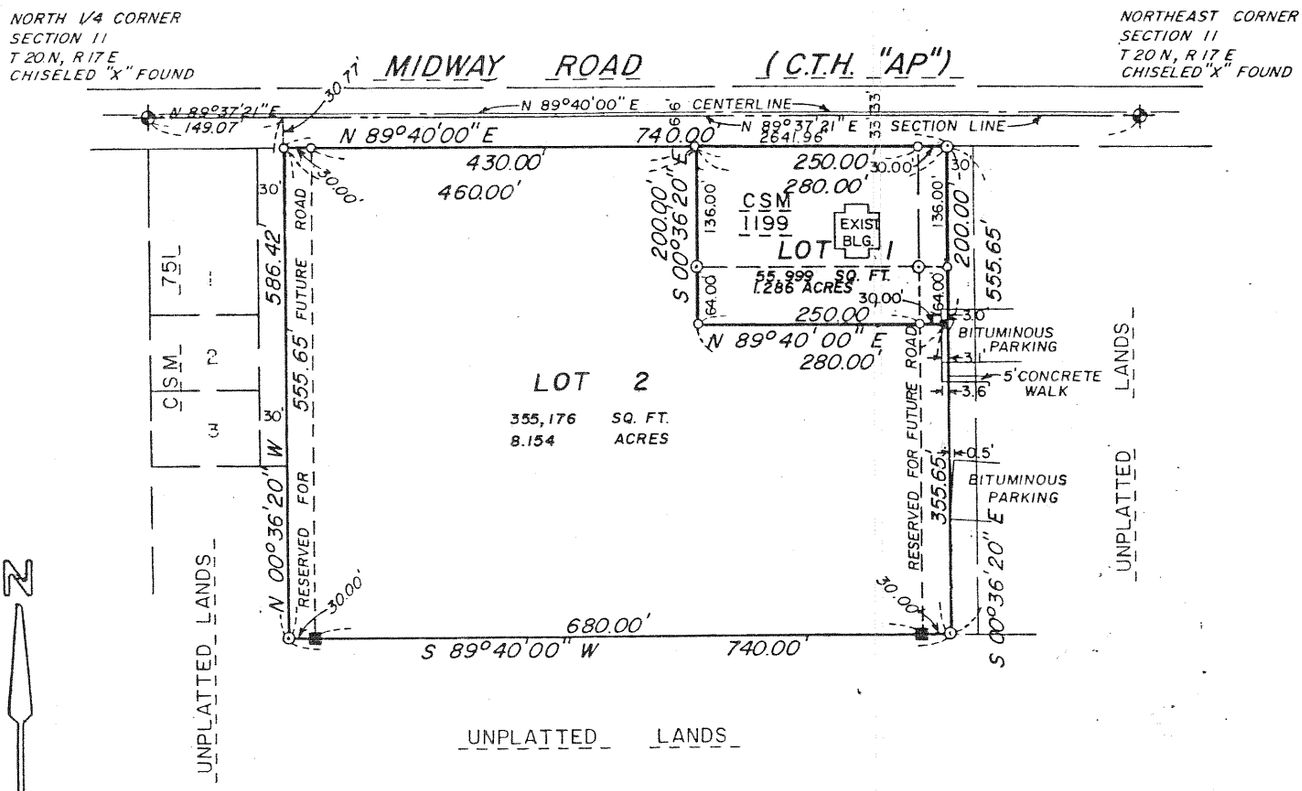

SCALE IN FEET
0 100 200 400

BEARINGS ARE REFERENCED TO THE SOUTH LINE OF MIDWAY ROAD (C.T.H. "AP") WHICH IS RECORED TO BEAR N 89°40'00" E.

SURVEY FOR:

CATHIOLIC DIOCESE OF GREEN BAY
P.O. BOX 1825
GREEN BAY, WI 54305-5825

SURVEY OF LANDS DESCRIBED IN VOLUME 933, PAGES 413 & 414

LEGEND

- ○ 3/4" STEEL REINFORCING BAR SET, 24" LONG WEIGHING 1.502 LBS. PER LIN. FOOT
- ● 1-1/4" STEEL REINFORCING BAR SET, 30" LONG WEIGHING 4.303 LBS. PER LIN. FOOT
- SECTION MONUMENT
- ▼ P.K. NAIL
- ⊙ 1" IRON PIPE FOUND
- ■ 2" IRON PIPE FOUND
- □ 3/4" REBAR FOUND
- ▽ 1-1/4" REBAR FOUND
- x—x—x FENCE
- x CHISELED "x"
- ▼ RAILROAD SPIKE
- ( ) RECORDED AS

WISCONSIN DANIEL W. HOEL S-1786 APPLETON WIS. LAND SURVEYOR

Daniel W. Hoel
9/27/90
REVISED 1-15-91

Martenson & Eisele, Inc.
CONSULTING ENGINEERING & LAND SURVEYING
1919 AMERICAN COURT
NEENAH, WI 54956
PHONE 731-0381

PROJECT NO. 300-003
FIELD BOOK GRID PAGE —
DISK — JOB —
SHEET 1 OF 3

THIS INSTRUMENT WAS DRAFTED BY: M.A. STROBEL

GAZEBO DETAILS

19' X 30' Gazebo

6" X 6" Treated Posts 10' on center set down 5' with concrete base

30' Clear Span Truss with 6/12 Pitch, Cathedral ceiling

#1 Fascia 6" Forest Green - to match Fascia on existing building

Soffit Forest Green – to match existing Soffit on Jitters

Beans 6"X6" treated lumber

Roofing, 30 year Elk Architectural Hunter Green shingles

Ice & Water Barrier on entire roof

#2 Fascia 8" custom mill round log pine stained Honey Brown to match existing siding on Jitters

19' X 30' GAZEBO

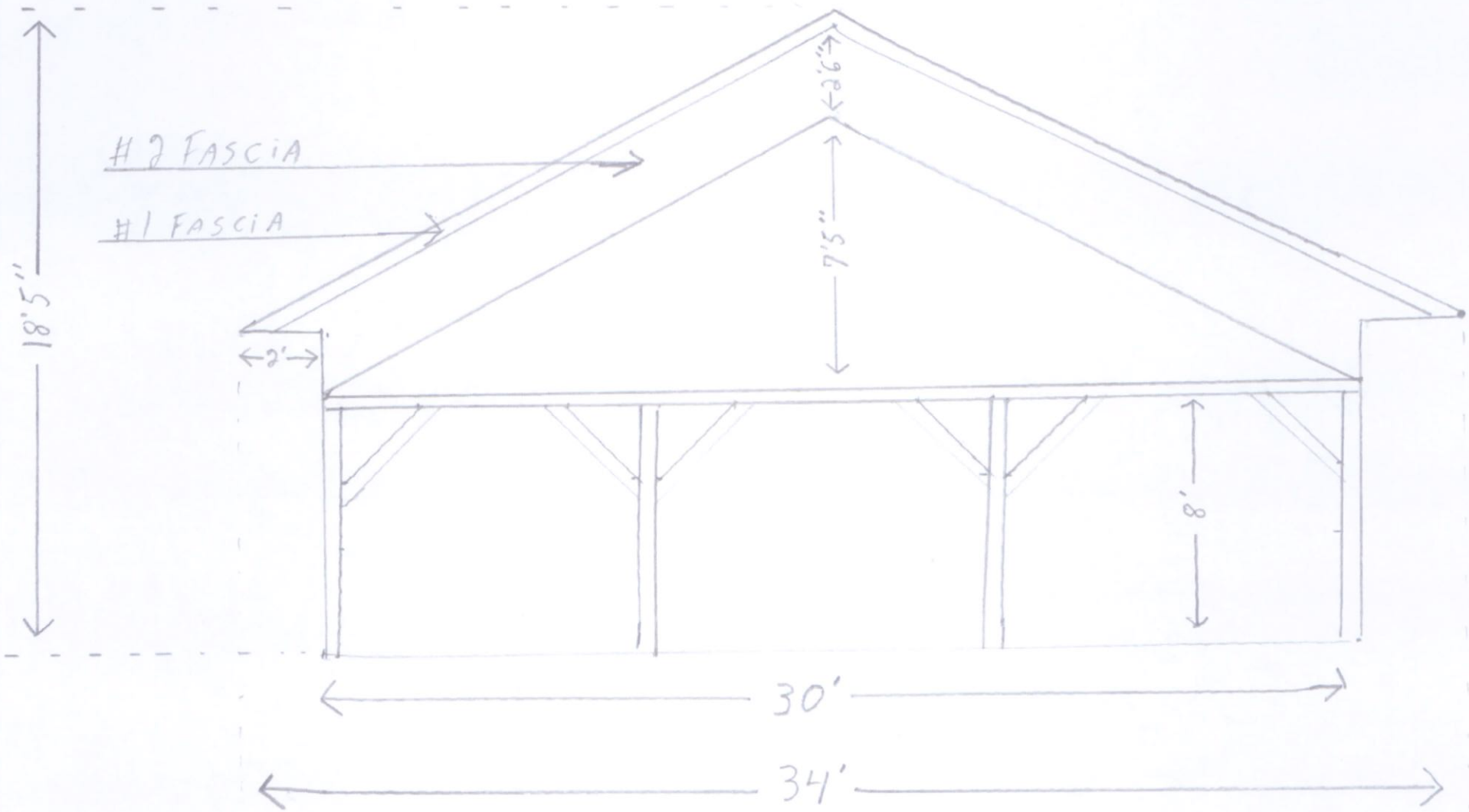

Job Name: KEMPS / JITTERS Truss ID: T-02 Qty: 11 Drwg:

BRG	X-LOC	REACT	SIZE	REQ'D
1	0- 1-12	1803	3.50"	2.83"
2	29-10- 4	1803	3.50"	2.83"

BRG REQUIREMENTS shown are based ONLY on the truss material at each bearing

TC	FORCE	AXL	BND	CSI
1-2	-3092	0.10	0.36	0.45
2-3	-5030	0.16	0.33	0.49
3-4	-5771	0.33	0.23	0.57
4-5	-5771	0.33	0.23	0.57
5-6	-5030	0.16	0.33	0.49
6-7	-3091	0.10	0.36	0.45

BC	FORCE	AXL	BND	CSI
8-9	93	0.00	0.15	0.15
9-10	3260	0.33	0.08	0.42
10-11	5077	0.52	0.09	0.62
11-12	5077	0.52	0.09	0.62
12-13	3260	0.33	0.08	0.42
13-14	93	0.00	0.15	0.15

WEB	FORCE	CSI	WEB	FORCE	CSI
1-8	-1747	0.25	5-11	905	0.22
1-9	2698	0.66	5-12	-700	0.10
2-9	-1306	0.19	6-12	1513	0.37
2-10	1513	0.37	6-13	-1306	0.19
3-10	-700	0.10	7-13	2698	0.66
3-11	905	0.22	7-14	-1747	0.25
4-11	4696	0.49			

TC	2x4	SPF	C2100F1.8E
BC	2x6	SPF	C1650F1.5E
WEB	2x4	SPF	#1/#2-CAN
	2x6	SPF	C1650F1.5E 11-4

Loaded for 200 lb non-concurrent moving BCLL.
ASCE7-98 SNOW LOAD DESIGN CRITERIA:
(for the balance snow load case only)
Pg = 40 psf, Ce = 1.0, I = 1.0, Ct = 1.10
WISCONSIN Alternative Std E #200264-A
(for the unbalance snow load cases only)
Ss = 40 psf, I = 1.0, Cb = 0.8, Cw = 1.0

[PM]=PLATE MONITOR USED-See Joint Report
Plating spec : ANSI/TPI - 1995
THIS DESIGN IS THE COMPOSITE RESULT OF MULTIPLE LOAD CASES.
IRC/IBC truss plate values are based on testing and approval as required by IBC 1703 and ANSI/TPI and are reported in available documents as ER-1607 and ESR-1118.
+ +
Unrestrained horiz. LL deflection = 0.57 "
+ +
End verticals are designed for axial loads only unless noted otherwise.
Extensions above or below the truss profile (if any) have been designed for loads indicated only. Horizontal loads applied at the end of the extensions have not been considered unless shown. A drop-leg to an otherwise unsupported wall may create a hinge effect that requires additional design consideration (by others).

UPLIFT REACTION(S) :

Support	C&C Wind	Non-Wind
1	-125 lb	
2	-125 lb	

This truss is designed using the ASCE7-98 Wind Specification
Bldg Enclosed = No, Importance Factor = 1.00
Truss Location = Not End Zone
Hurricane/Ocean Line = No , Exp Category = B
Bldg Length = 20.00 ft, Bldg Width = 30.00 ft
Mean roof height = 15.00 ft, mph = 90
ASCE7 II Standard Occupancy, Dead Load = 10.0 psf
Designed as Main Wind Force Resisting System
- Low-rise and Components and Cladding
Tributary Area = 60 sqft

MAX DEFLECTION (span) :
L/697 MEM 10-11 (LIVE) LC 17
L= -0.51" D= -0.33" T= -0.84"

===== Joint Locations =====			
1	0- 0- 0	8	0- 0- 0
2	5- 0- 0	9	5- 0- 0
3	10- 0- 0	10	10- 0- 0
4	15- 0- 0	11	15- 0- 0
5	20- 0- 0	12	20- 0- 0
6	25- 0- 0	13	25- 0- 0
7	30- 0- 0	14	30- 0- 0

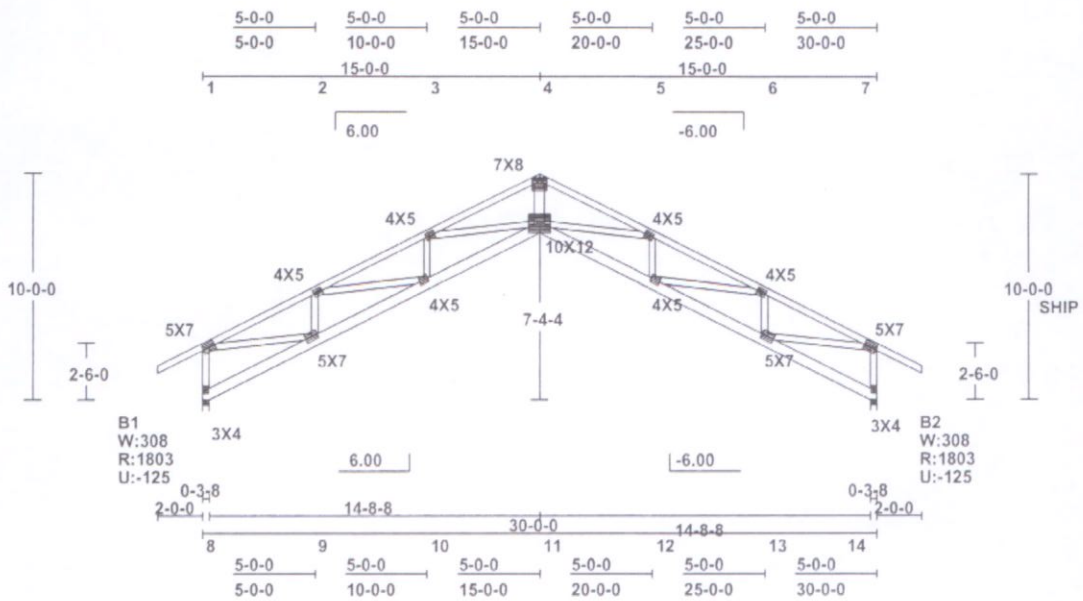

4/28/2009

All plates are 20 gauge Truswal Connectors unless preceded by "MX" for HS 20 gauge or "H" for 16 gauge, positioned per Joint Detail Reports available from Truswal software, unless noted.

Scale: 1/8" = 1'

PH. 920-766-0601

VALLEY TRUSSES INC

P.O. BOX 101, Kaukauna, WI. 54130

WARNING Read all notes on this sheet and give a copy of it to the Erecting Contractor.

This design is for an individual building component not truss system. It has been based on specifications provided by the component manufacturer and done in accordance with the current versions of TPI and AFPA design standards. No responsibility is assumed for dimensional accuracy. Dimensions are to be verified by the component manufacturer and/or building designer prior to fabrication. The building designer must ascertain that the loads utilized on this design meet or exceed the loading imposed by the local building code and the particular application. The design assumes that the top chord is laterally braced by the roof or floor sheathing and the bottom chord is laterally braced by a rigid sheathing material directly attached, unless otherwise noted. Bracing shown is for lateral support of components members only to reduce buckling length. This component shall not be placed in any environment that will cause the moisture content of the wood to exceed 19% and/or cause connector plate corrosion. Fabricate, handle, install and brace this truss in accordance with the following standards: 'Joint and Cutting Detail Reports' available as output from Truswal software, 'ANSI/TPI 1', 'WTCA 1' - Wood Truss Council of America Standard Design Responsibilities, 'BUILDING COMPONENT SAFETY INFORMATION' - (BCSI) and 'BCSI SUMMARY SHEETS' by WTCA and TPI. The Truss Plate Institute (TPI) is located at 218 N. Lee Street Suite 312, Alexandria, VA 22314. The American Forest and Paper Association (AFPA) is located at 1111 19th Street, NW, Ste 800, Washington, DC 20036.

Chk:
Dsgnr: DS

TC Live	30.00 psf	DurFacs L=1.15 P=1.15
TC Dead	10.00 psf	Rep Mbr Bnd 1.15
BC Live	0.00 psf	O.C.Spacing 2- 0- 0
BC Dead	10.00 psf	Design Spec IBC-WISN
TOTAL	50.00 psf	Seqn T6.5.7 - 34419

WO: KEMPS 042409

LIGHTING DIAGRAM

3 Lights to be installed 14' above ground centered in peak of Gazebo

Lights manufactured by Hubb

#S12-84F surface mount 2 lamp compact

Fluorescent fixture with lamps

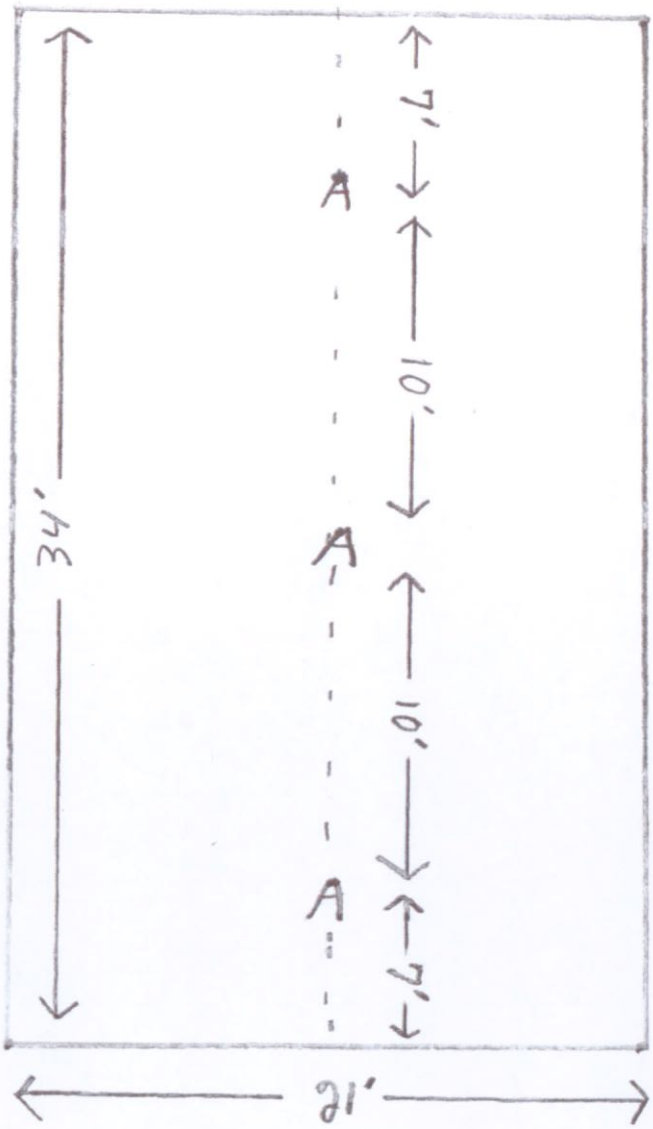

LitePro 2.025 Point-By-Point Results 5/5/2009

PROJECT: Beer Garden/DP50509 GROUP: Garden AREA: Gazebo Area GRID: Table Hgt (Ceil. peak runs N-S)
PREPARED BY: Dave - Visual Impact Lighting
VALUES ARE FC, SCALE: 1 IN= 8.0FT, HORZ GRID (U), HORZ CALC, Z= 2.5
ROOM REFLECTANCES: 70 / 50 / 20 (Ceiling/Walls/Floor)
Computed in accordance with IES recommendations

Statistics

GROUP	MIN	MAX	AVE	AVE/MIN	MAX/MIN
(+)	5.89	16.76	11.26	1.91	2.85

Luminaires Used

TYPE	QTY	TEST#	DESCRIPTION
A	3	2015	Hubbell, S12-84F, Wallpack 12" SQUARE WALLPACK - WHITE FL, ACRYLIC PRISMATIC LENS LAMPS: (2) PL-T 42W/30/4P/ALTO, 3200 LUMENS, BLST: CSD-UV42PS, LLF = 0.85 @12.00

Horizontal foot candles

Y-AXIS

33.00	5.89	9.20	11.9	11.9	9.20	5.89
29.00	6.74	11.0	14.5 [A]	14.5	11.0	6.74
25.00	7.66	12.5	16.2	16.2	12.5	7.66
21.00	8.08	13.1	16.7	16.7	13.1	8.08
17.00	7.94	12.7	16.5 [A]	16.5	12.7	7.94
13.00	8.08	13.0	16.8	16.8	13.1	8.08
9.00	7.67	12.5	16.1	16.1	12.5	7.67
5.00	6.73	11.0	14.5 [A]	14.5	11.0	6.73
1.00	5.89	9.19	11.9	11.9	9.19	5.89

0.50 4.50 8.50 12.50 16.50 20.50

X-AXIS

Lighting dispersion pattern and photometric calculations

Dumpster Enclosures
To Be Built 72" High
6"X6" Posts Treated Lumber
To Be Set 5' in Concrete
Fencing to Be 2"X10"
treated lumber spaced
12" on Center

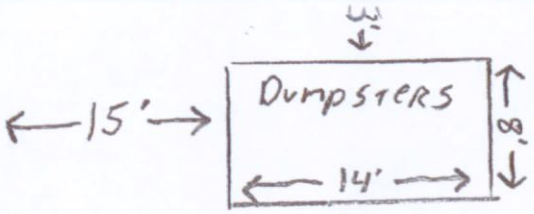

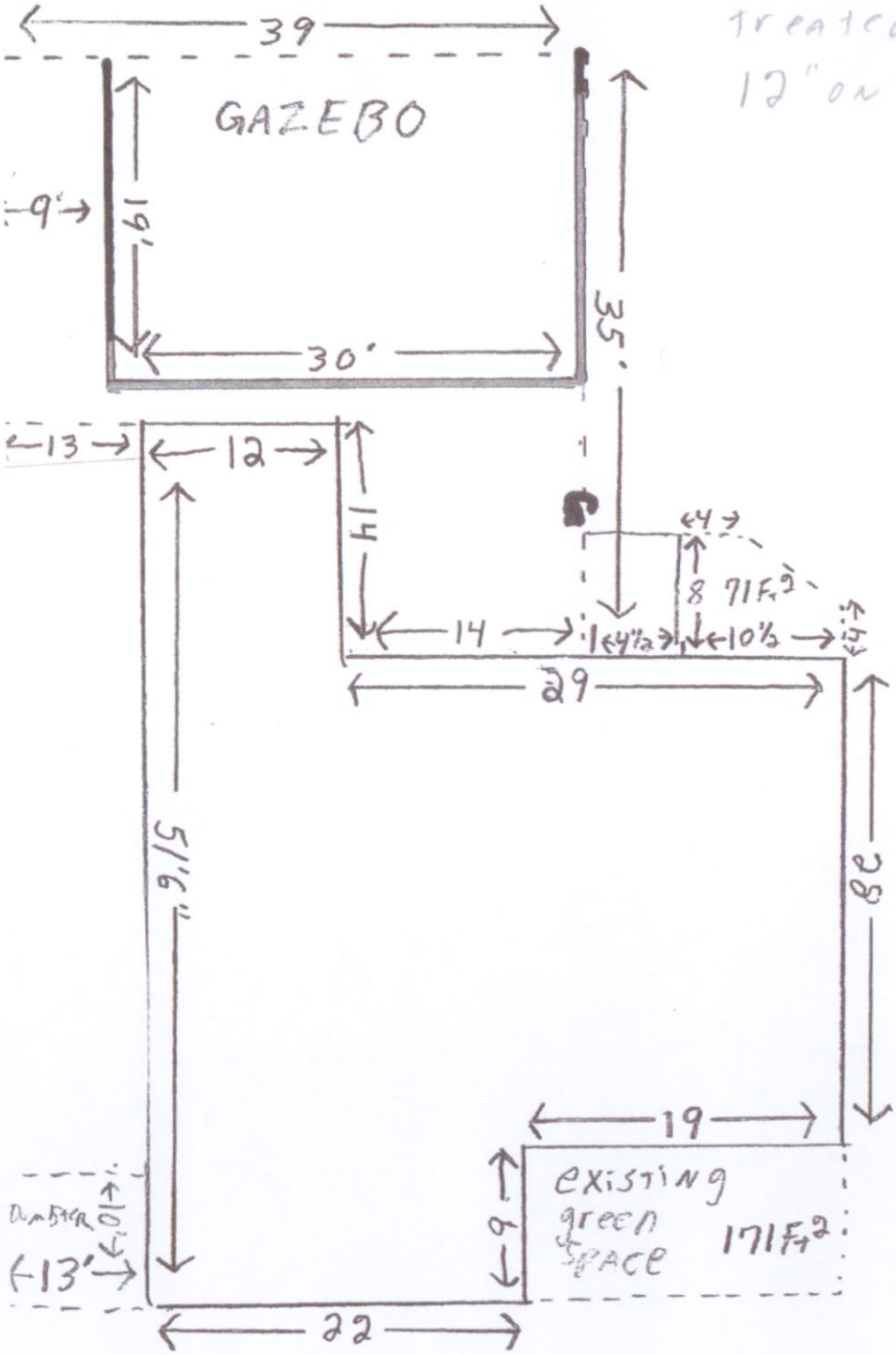

Existing Square Footage of Jitters 2057

Proposed Beer Garden to Be 1015 sq Feet

Fencing To Be 48" Tall

Fence Posts To Be 6"X6" Treated Lumber set in Concrete 5' deep 10' on Center

Fencing To Be 2"X10" treated lumber

Completion Date To Be October 15, 2009

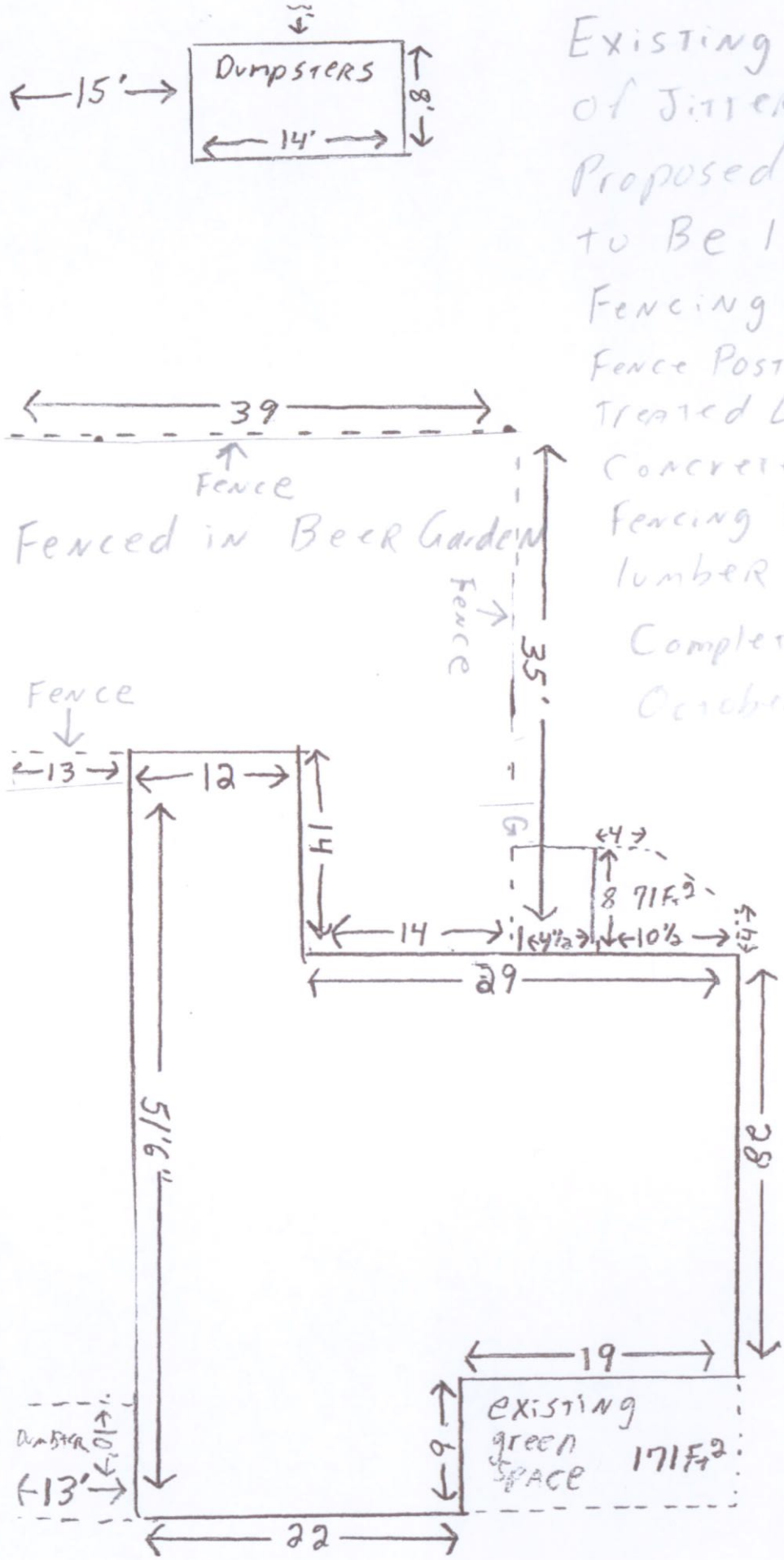

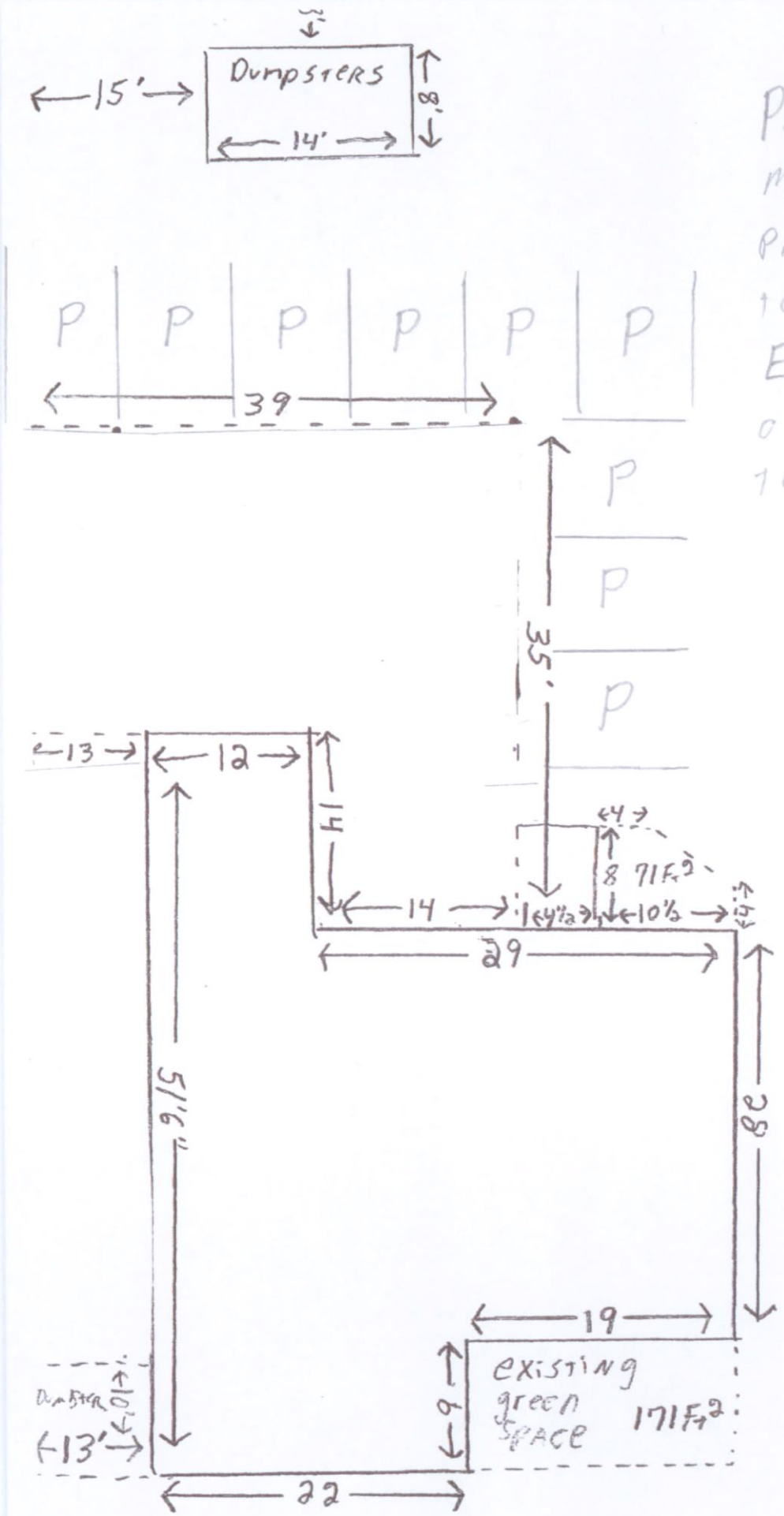

Parking Spots MARKED WITH P
Parking lot Area to Be 3,770 sq FT
Existing grade of entire lot to be maintained.

1 existing Driveway

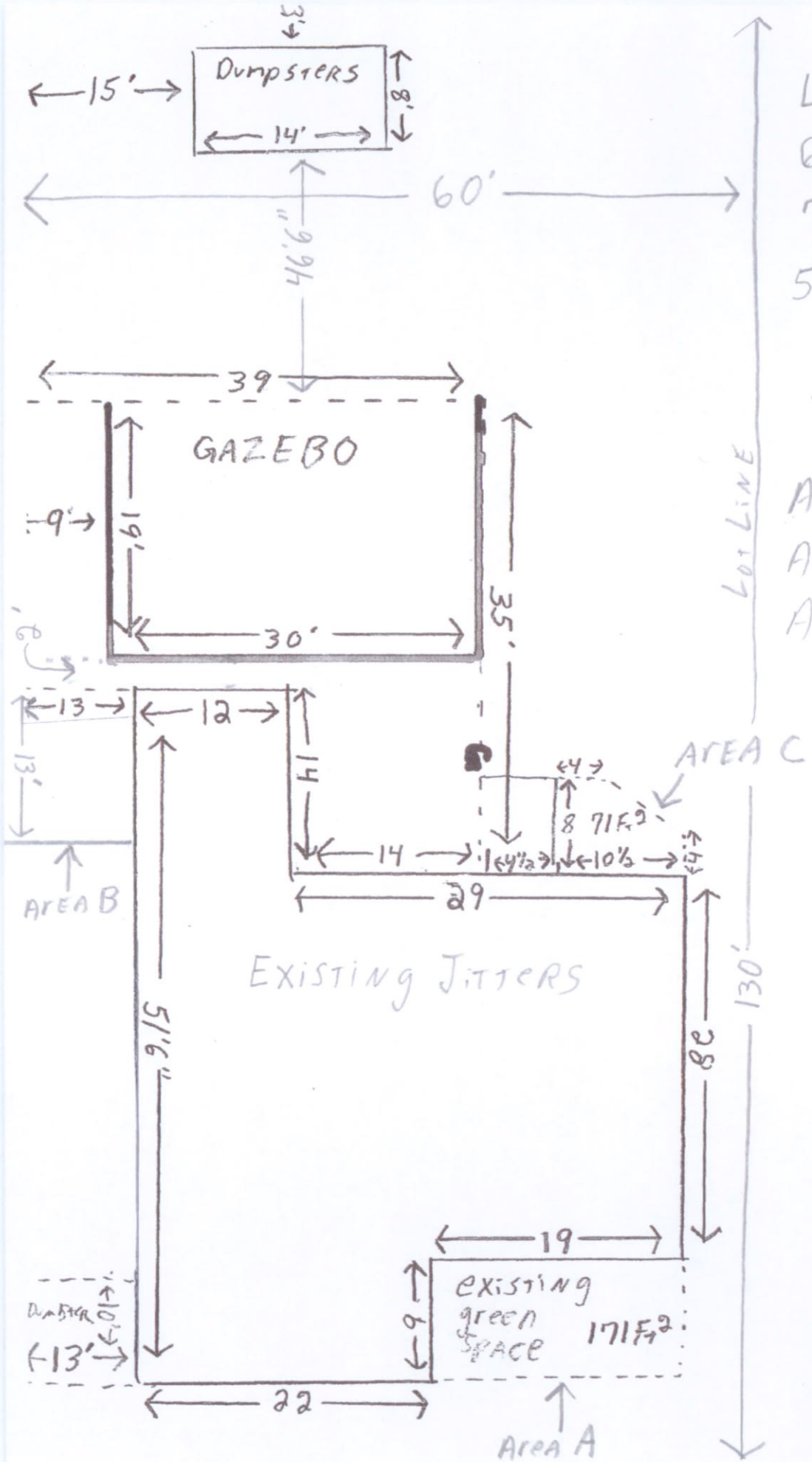

Lot Size
60' X 130'
7800 SQ FT.
5% of 7800 = 390

Total Landscaping

Area A	171
Area B	169
Area C	71
	411 Sq. Ft

S9/S12 SERIES

VANDAL RESISTANT FIXTURES

Cat. # S12-84F		Approvals
Job	Type	

HUBBELL® Outdoor Lighting

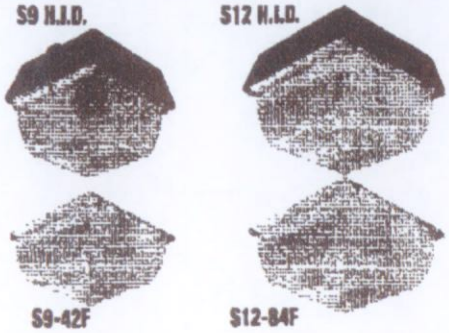

APPLICATIONS

- Ceiling/canopy lighting. Safety and security illumination for parking garage, entrance canopies, stairwells, building eaves.

SPECIFICATIONS

- Die cast aluminum housing with 1/2" conduit hubs.
- Vandal resistant prismatic polycarbonate refractor.
- Bronze powder paint finish on H.I.D. units.
- Medium base or compact fluorescent lamps included.
- Typical mounting height ranges from 8 to 15 feet.

LISTINGS

- **S9/S12 Series**
  UL wet location listed for wall or ceiling mount.
  Center pin torx screws are standard.

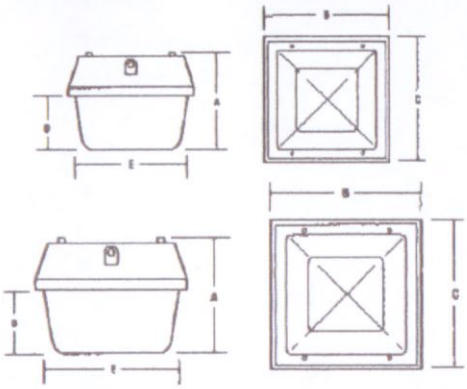

	A	B	C	D	E
S9 H.I.D.	7.09"	8.858"	8.858"	4.1"	8.5"
	180 mm	225 mm	225 mm	104 mm	216 mm
S12 H.I.D.	8.858"	12.362"	12.362"	5.3"	11.8"
	225 mm	314 mm	314 mm	135 mm	300 mm

*CFL units are low profile with no ballast box or conduit hubs. Use B, D & E dimensions above.

ORDERING INFORMATION

Catalog Number[1]	Description	Voltage	Finish	Weight lbs	Weight kg
	WET LOCATION: CEILING/WALL MOUNT COMPACT S-9				
S9-42F	42W Fluorescent	120, 208, 240, 277	-	4	(1.8)
S9-70H	70W Pulse Start	120, 208, 240, 277	Bronze	10	(4.5)
S9-70S	70W High Pressure Sodium	120, 208, 240, 277	Bronze	10	(4.5)
	WET LOCATION: CEILING/WALL MOUNT MID-SIZE S-12				
S12-84F	2X42W Fluorescent	120, 208, 240, 277	-	8	(3.6)
S12-100H	100W Pulse Start	120, 208, 240, 277	Bronze	15	(6.8)
S12-150P	150W Pulse Start	120, 208, 240, 277	Bronze	16	(7.3)
S12-150S	150W High Pressure Sodium	120, 208, 240, 277	Bronze	16	(7.3)

1 Lamp included on all units.

REPLACEMENT PARTS (order as separate part #, field installed)

Catalog Number	Description
SM009-LENS	Refractor only for S9 units
SM012-LENS	Refractor only for S12 units

Due to our continued efforts to improve our products, product specifications are subject to change without notice.

HUBBELL®
Hubbell Outdoor Lighting • 701 Millennium Boulevard • Greenville, SC 29607 • PHONE: 864-678-1000
For more information visit our web site: **www.hubbell-ltg.com**

Van Buskirk & Son Nursery

617 ~~605~~ Airport Road • Menasha, WI 54952 • 414 722-5731

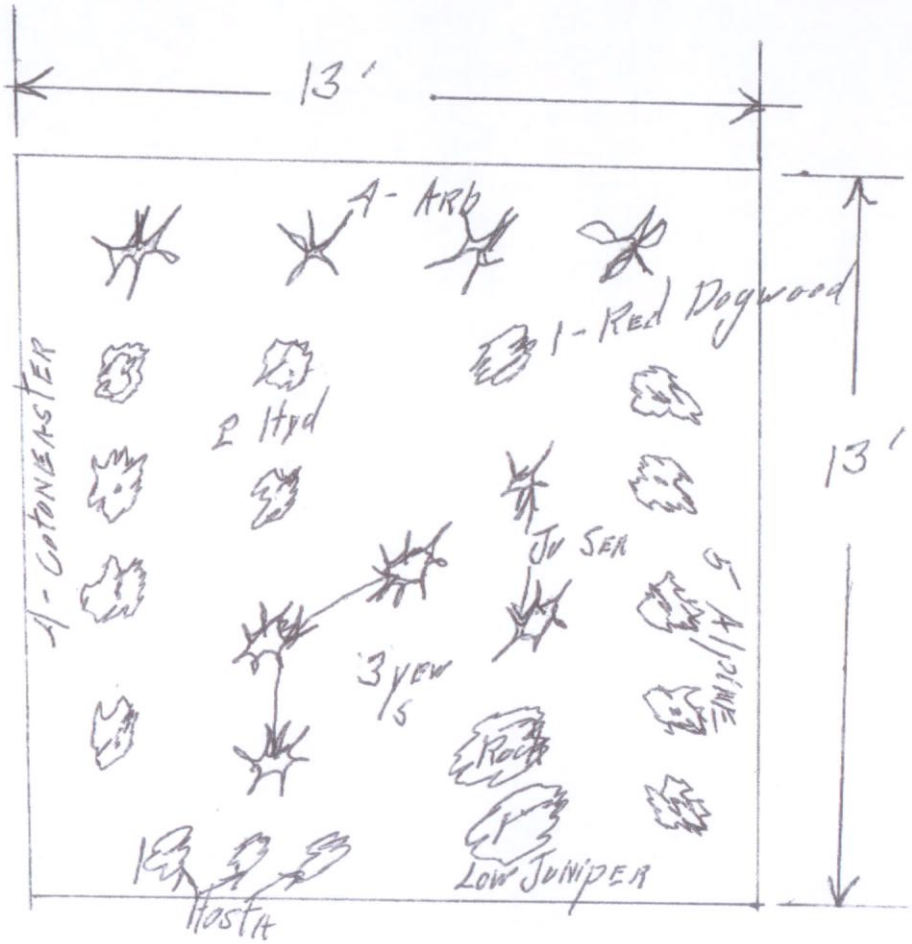

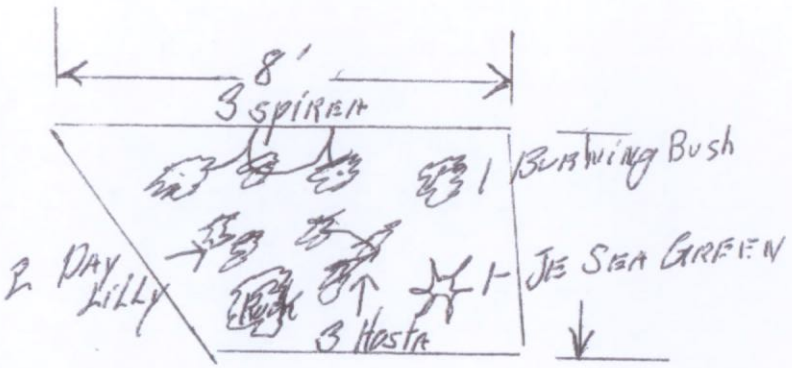

VAN BUSKIRK & SON NURSERY
624 ~~605~~ Airport Road
MENASHA, WI 54952
Phone 722-5731

SOLD BY

DATE 19

NAME Jitter's Bab

PHONE

ADDRESS Menasha

CITY

☐ CASH ☐ C.O.D. ☐ CHARGE ☐ PAID OUT ☐ MDSE. RETD. ☐ PD. ON ACCT. PREVIOUS BALANCE

4	Pyr. Arborvitae - 4'		
4	Cotoneaster - 2½-3'		
5	Alpine Currant - 18-24"		
2	Hydrangea - 15"		
3	Sp. Yews - 15"-18"		
1	Red Dogwood - 2½-3		
2	Juniper Sea Green 15-18"		
1	Low Juniper 15-18"		
3	Hosta		
1	Rock		
1	Burring Bush - 3'		
3	Spirea - 15"		
1	Juniper Sea Green 15-18"		
2	Day Lilly		
3	Hosta		
		$1200.00 - $	1400.00
	Cover Beds with Miss. Stone		

Thank You!

RECEIVED BY

PRODUCT 690-I NEBS Inc., Groton, Mass. 01471. To Order PHONE TOLL FREE 1 + 800-225-6380

ORDINANCE O-XX-09

AN ORDINANCE RELATING TO SIGNS

Introduced by Alderman Benner at the recommendation of the Plan Commission.

The Common Council of the City of Menasha does ordain as follows:

SECTION 1: Article F, SEC.13-1-60 through SEC. 13-1-70 is repealed and recreated to read as follows:

ARTICLE F

Signs

SEC. 13-1-60 APPLICABILITY AND PURPOSE OF SIGN REGULATIONS

(a) **Applicability.** This ordinance shall apply to all outdoor/exterior signs. The standards of the ordinance shall apply to all persons, firms, partnerships, associations, and corporations owning, occupying, or having control or management of any premises located within the limits of the City of Menasha.

(b) **Purpose.** The purpose of this ordinance is to regulate signs and outdoor advertising within the City of Menasha in order to protect public safety, health, and welfare; minimize abundance and size of signs; reduce motorist distraction and loss of safe sight distance; promote public convenience; preserve property values; support and complement land use objectives as set forth in the city's zoning ordinance; and enhance the aesthetic appearance and quality of life within the city. The standards contained herein are intended to achieve the following objectives:

(1) Establish a sign permit system to allow a variety of types of signs in the community and prohibit all signs not expressly permitted by this ordinance.

(2) Encourage the effective use of signs as a means of communication.

(3) Enable the public to locate goods, services, and facilities without excessive difficulty and confusion by restricting the number and placement of signs.

(4) Protect the public right to receive messages, especially non-commercial messages such as political, religious, economic, social, philosophical, and other types of information protected by the First Amendment of the U.S. Constitution.

(5) Recognize that the principal intent of commercial signs, to meet the purpose of these standards and serve the public interest, should be for identification of an establishment on the premises, and not for advertising special events, brand names, or off-premise activities. Alternative channels of advertising communication and media are available which do not create visual blight and compromise the safety of the motoring public.

(6) Recognize that the proliferation of signs is unduly distracting to motorists and non-motorized travelers, reduces the effectiveness of signs directing and warning the public, causes confusion, reduces desired uniform traffic flow, and creates potential for vehicular accidents.

(7) Maintain and improve the image of the city by encouraging signs that are compatible with existing signs, have good viewing qualities with passing

motorists, and are compatible with buildings and streets, through the establishment of specific standards for various zoning districts in the city.

(8) Prevent signs that are potentially dangerous to the public due to structural deficiencies, disrepair, or distraction to motorists.

(9) Reduce visual pollution and physical obstructions caused by a proliferation of signs that could diminish the city's image, property values, and quality of life.

(10) Prevent placement of signs that will conceal or obscure signs of adjacent uses.

(11) Limit the use of portable commercial signs in recognition of their collective significant negative impact on traffic, safety, and aesthetics of the community.

(c) The regulations and standards of this ordinance are considered the minimum amount of regulation necessary to achieve a substantial government interest for public safety, aesthetics, and protection of property values.

SEC. 13-1-61 DEFINITIONS

(a) **Accessory Structure Sign.** Any sign permanently attached to an accessory structure.

(b) **Animated Sign.** Any sign that uses movement or change of lighting to depict action or create a special effect or scene.

(c) **Awning/Canopy.** A permanently-mounted durable hood or cover which projects from the wall of the building and may or may not be retracted, folded, or collapsed against the face of a supporting structure.

(d) **Banner.** Any sign of lightweight fabric or similar material that is mounted to the ground, pole, sign, or structure and is designed to be easily moved from one location to another. Government-related flags shall not be considered banners.

(e) **Bench Sign.** A sign attached to or painted on any bench that is located in any right-of-way or is in view from any right-of-way.

(f) **Billboard.** A sign directing attention to a use, facility, activity, message, product, or service which is not conducted on or related to the premises upon which the sign is located.

(g) **Blanketing.** The unreasonable obstruction of view of a sign caused by the placement of another sign.

(h) **Building Exposure.** For the purposes of this ordinance only, a building exposure shall be determined by enclosing the most protruding points or edges of a structure within a square or rectangle that will encompass the extreme limits of the structure. Each side of such square or rectangle shall be designated a building exposure.

(i) **Business.** A person, partnership, organization, cooperative, association, trust, corporation, or similar entity which has a legal existence and functions for commercial, industrial, professional, or philanthropic purposes.

(j) **Business Center.** Multiple businesses located on **a** unit or units of contiguous property meeting any of the following criteria:

(1) utilizing shared or inter-connected parking areas;

(2) utilizing shared access drives.

(k) **Business Center Sign.** A monument sign identifying the entrance to a business center and/or the names of the businesses located within the business center.

(l) **Commercial Message.** Any sign wording, logo, or other representation that directly or indirectly names, advertises, or calls attention to a business, product, service, or other commercial activity.

(m) **Commercial Vehicle Sign.** A commercial vehicle containing sign copy which is parked in such a manner and for such duration as to demonstrate its intention to serve as a sign. This definition does not include any commercial vehicle that is used in the normal day-to-day operations of the business and is parked in any parking space approved for such parking by the City of Menasha.

(n) **Construction Sign.** ~~A temporary sign erected on the premises on which city approved construction is taking place.~~ Construction signs are temporary signs which consist of two types:

(1) Signs erected on the premises where a building permit has been issued or other city approval has been granted. Such signs may indicate the name of the business, or the architects, engineers, landscape architects, contractors, or similar artisans, and the owners, financial supporters, sponsors, and similar individuals or firms having a role or interest with respect to the business, structure, or project.

(2) Signs erected either on or off-premises for the purposes of facilitating traffic flow or identifying businesses whose access has been temporarily disrupted by right-of-way construction activities such as street or utility projects.

(o) **Directional Sign.** Signs limited to directional messages, principally for pedestrian or vehicular traffic, such as "one-way," "entrance," or "exit."

(p) **Electronic Message Center.** A permanent sign whose informational content can be changed or altered by electronic means.

(q) **Erect.** Shall mean to build, construct, attach, hang, place, install, suspend, affix, reconstruct, or relocate.

(r) **Flag.** Any fabric, banner, or bunting containing distinctive colors, patterns, or symbols, used as a symbol of a government, school, or other political subdivision.

(s) **Frontage.** The boundary of a lot which abuts an existing or dedicated public street.

(t) **Hanging Sign.** A small pedestrian-oriented sign that is permanently suspended below a horizontal plane surface such as a marquee or canopy.

(u) **Integral Sign.** A sign containing the names of buildings, dates or erection and other similar monumental citation, when carved into stone, concrete, or similar material or made of bronze, aluminum, or other non-combustible material and made an integral part of the structure.

(v) **Landmark Sign.** An older sign of artistic or historic merit, uniqueness, or extraordinary significance to the city or a sign which describes state or national designation of an historic site or structure. Such signs shall be identified by the Landmarks Commission.

(w) **Legal Non-Conforming Sign.** A sign lawfully existing at the time of the adoption of this ordinance, or amendment thereto, which does not conform to this ordinance.

(x) **Marquee Sign.** A sign attached to or consisting in part of an interchangeable copy reader on a permanent overhanging shelter which projects from the face of a building.

(y) **Monument Sign.** A sign in which the entire bottom is in contact with or is close to the ground and is independent of any other signs.

(z) **Non-Commercial Sign.** Signs containing non-commercial messages, such as those designating the location of public telephones, restrooms, restrictions on smoking, and restrictions on building entrances.

(aa) **Off-Premise Sign.** A sign directing attention to a use, business, commodity, service, or activity not conducted, sold, or offered upon the premises where the sign is located.

(bb) **On-Premise Sign.** A sign which identifies the occupant(s) of the premises or relates solely to the use, business, or profession conducted, or to a principal commodity, service, or entertainment sold, offered, or provided upon the premises.

(cc) **Pennant.** Any lightweight plastic, fabric, or other material, whether or not containing a message of any kind, suspended from a rope, wire, or string, sometimes in series, designed to move in the wind. Flags as defined in this Section shall not be considered pennants.

(dd) **Plaque Sign.** A small, pedestrian-oriented version of a wall sign that is permanently attached to surfaces adjacent to store front entries.

(ee) **Pole Sign.** A sign in which the bottom is not in contact with or close to the ground and that is mounted on a freestanding pole(s), column(s), or similar support.

(ff) **Political Sign.** A temporary sign announcing or supporting political candidates or issues in connection with any national, state, or local election or political event, or expressing a political opinion.

(gg) **Portable Sign.** Any sign designed or constructed to be easily moved or transported, including, but not limited to the following signs:

(1) banners;
(2) non-government related flags;
(3) pennants;
(4) sandwich board signs;
(5) signs with wheels or wheels removed;
(6) signs with chassis or support constructed without wheels;
(7) signs designed to be transported by trailer or wheels;
(8) signs attached temporarily to the ground, structure, or other signs;
(9) searchlights and stands;
(10) hot-air or gas-filled balloons or umbrellas used for advertising; and,
(11) substantially similar signs as determined by the Zoning Administrator.

(hh) **Premises.** Shall mean a unit or units of contiguous property meeting any of the following criteria:

(1) utilizing shared or inter-connected parking areas;
(2) utilizing shared access drives;

(ii) P**rojecting Sign.** A pedestrian-oriented sign that is permanently affixed to the face of a building or structure and projects in a perpendicular manner more than twelve (12) inches from the wall surface of that portion of the building or structure to which it is mounted.

(jj) **Real Estate Sign.** A temporary sign which is used to offer for sale, lease, or rent the property, business, or structure upon which the sign is placed.

(kk) **Restaurant Menu Sign.** A small, pedestrian-oriented sign which incorporates a menu containing a list of products and prices offered by the restaurant.

(ll) **Roof Sign.** A sign located on a roof or projecting above any portion of a roof or exterior wall of the structure.

(mm) **Sandwich Board Sign.** A portable sign having two separate and opposite facing sign faces which are hinged at the top, and supported be spreading the sign faces into an upside down "V" formation.

(nn) **Sidewalk Sign.** A portable sign placed on a public sidewalk.

(oo) **Sign.** Any object, device, display, or structure, or part thereof, situated outdoors or indoors, which is used to advertise, identify, display, direct, or attract attention to an object, person, institution, organization, business, product, service, event, or location by any means, including words, letters, figures, design, symbols, fixtures, colors, illumination, or projected images.

(pp) **Static Display.** A sign display whose characters or images are not changed more than once in a 24-hour period.

(qq) **Store Front.** A store front shall be determined by measuring the linear feet of that portion of a building exposure that corresponds to the interior ground level space occupied by a single tenant and abutting a public street, parking area, access drive, or pedestrian walkway.

(rr) **Structure.** Anything constructed or erected, the use of which requires a permanent location on the ground or attached to something having a permanent location on the ground.

(ss) **Temporary Sign.** Any sign designed or constructed to be easily moved from one location to another and which are only planned to be in use for time periods of limited duration. Under this ordinance, real estate signs, political signs, and construction signs shall be considered temporary signs. Portable signs as defined in this Section are not included in this definition.

(tt) **Tenant Directory Sign.** A sign used to identify multi-tenant buildings and businesses that do not have direct frontage on a public street.

(uu) **Wall Sign.** A sign fastened to the wall of a building or structure in such a manner that the wall becomes the supporting structure for, or forms the background surface of, the sign and that does not project more than twelve (12) inches from such buildings or structure.

(vv) **Window Sign.** Any sign that is placed inside a window or upon window panes or glass and is visible from the exterior of the window.

SEC. 13-1-62 SIGNS EXEMPT FROM PERMIT REQUIREMENTS

(a) **Artwork.** Works of art which do not identify a business, product, or service.

(b) **Construction Signs.** Temporary construction signs shall be permitted in accordance with the following standards:

(1) Construction signs in single and two family residential districts shall not exceed six (6) square feet per sign face, twelve (12) square feet per sign, and six (6) feet in height, and are limited to one (1) per lot. The sign shall be removed within three (3) days of the end of construction activity.

(2) Construction signs in multi-family and other districts shall not exceed thirty-two (32) square feet per sign face, sixty-four (64) square feet per sign. Such signs shall be limited to one (1) sign per street frontage per business. The signs shall be removed within fifteen (15) days of the end of construction activity.

(3) In instances where temporary signs are necessary in commercial and industrial districts due to right-of-way or similar construction, the following standards shall apply:

a. Signs shall be used to facilitate business identification and traffic flow only for lots temporarily impacted by right-of-way construction.

b. Such signs shall not exceed thirty-two (32) square feet per sign face, sixty-four (64) square feet per sign and shall be limited to one (1) sign per access point.

c. In no instance shall signs be placed within vision control areas. When necessary, signs may be placed off premise on private property with permission of the property owner. The Director of Public Works may grant permission for signs to be temporarily placed in the right-of-way when deemed necessary and appropriate.

d. Such signs shall not be placed more than ten (10) days before construction commences and shall be removed within three (3) days of the end of right-of-way construction activity.

(c) **Directional Signs.** Directional signs shall be permitted in accordance with the following standards:

(1) Each premises shall be permitted two (2) directional signs per driveway, plus additional directional signs to improve circulation on-site provided they are not placed within the front yard.

(2) Directional signs shall not exceed twelve (12) square feet per sign face, twenty-four (24) square feet per sign, and shall not exceed six (6) feet in height.

(3) Directional signs may be placed in the vision control area provided they do not exceed three (3) feet in height.

(4) The sign may contain the following information only:

a. name of business or symbol (not both);

b. directional arrows;

c. the words "entrance" or "exit" or similar terms.

(d) **Flags.** Government-related flags.

(e) **Government Signs.** Signs erected by a governmental body.

(f) **Hanging Signs.** Hanging signs shall be permitted in accordance with the following standards:

(1) One sign is allowed per business

(2) Signs may not exceed four (4) sq. ft. per sign face excluding supports

(3) Signs may not be illuminated

(4) Signs must be pedestrian-oriented and positioned in a perpendicular manner to the building's wall surface.

(5) Hanging signs may be used only at ground floor locations except for upper floor businesses with covered entry porches or balconies.

(g) **Holiday Lighting.** Temporary lighting and displays that are part of customary holiday decoration, provided that they contain no commercial message and are not located in the right-of-way. Holiday displays and lighting in commercial, industrial, or multi-family districts may be displayed up to sixty (60) days prior to the holiday and shall be removed within fifteen (15) days after the holiday.

(h) **Integral Sign.** Names of buildings, dates of erection, monumental citation, commemorative tablets when carved into stone, concrete, or similar material, or made of bronze, aluminum, or other non-combustible material and made an integral part of the structure. Such signs shall not exceed twenty-five (25) square feet in area.

(i) **Landmark Signs.** Landmark signs as defined in this ordinance.

(j) **Nameplate.** Address, owner, or occupant nameplate and other signs of up to two (2) square feet in area attached to a mailbox, light fixture, or an exterior wall.

(k) **Off-Premise Special Event Signs.** Announcements by public or non-profit organizations of fund raising events, special events, or activities of interest to the general public which are located off-premise, other than political signs, provided that they meet the following:

(1) Such signs shall not exceed six (6) square feet per sign face, twelve (12) square feet per sign in residential districts and thirty-two (32) square feet per sign face for other districts.

(2) Such signs may be placed in the right-of-way at the discretion of and with authorization by the Director of Public Works.

(3) Signs may be erected up to two (2) weeks before the event and shall be removed within three (3) days after the event.

(l) **Parking Lot Signs.** Parking lot signs indicating restrictions on parking, when placed within approved parking lots.

(m) **Plaque Signs.** Plaque signs shall be permitted in compliance with the following standards:

(1) Signs must be located adjacent to a business entrance;

(2) One (1) sign shall be allowed per business entrance;

(3) Signs shall not exceed two (2) sq. ft. maximum and shall not project from wall surfaces more than two (2) inches;

(4) Signs may not be illuminated.

(n) **Political Signs.** Temporary political signs shall be removed within fifteen (15) days after the election or event.

(o) **Portable Signs.** Portable signs as defined in Sec. 13-1-61 shall be permitted in compliance with the following standards.

(1) The use of a portable sign shall be limited to thirty (30) days at a time, and not more frequently than three (3) times per calendar year at any one business. The placement of one portable sign constitutes one (1) event.

(2) For a special event, such as a grand opening or special sale, multiple portable signs may be used (such as banners, flags, or pennants). Use of multiple portable signs for special events shall be permitted one (1) time per calendar year per business, not to exceed (30) days at a time. This time period will be counted towards the allowable portable sign use of three (3) times per calendar year.

(3) The maximum size of any portable sign shall be thirty-two (32) square feet per sign face, sixty-four (64) square feet per sign.

(4) Portable signs shall be securely mounted, legible, and maintained in good condition.

(5) Portable signs with commercial messages are prohibited on properties employing the use of electronic message centers.

(p) **Real Estate Signs.** Real estate signs are permitted in compliance with the following standards:

(1) Real estate signs in residential districts are limited to one (1) sign per street frontage and may not exceed six (6) square feet per sign face, twelve (12) square feet per sign, and six (6) feet in height.

(2) Real estate signs in nonresidential district are limited to one (1) sign per street frontage and may not exceed thirty-two (32) square feet per sign face, sixty-four (64) square feet per sign, and eight (8) feet in height.

(3) Real estate signs shall be removed on or before fifteen (15) calendar days after the sale, lease, or rental of the premises or structure, property, subdivision, or condominium. The date of the acceptance of an offer to purchase, to lease, or to rent by the current owner, or the date of a placement of a sold, leased, or rented sign on the premises, whichever date is earlier, shall determine the beginning of the fifteen (15) day period.

(q) **Restaurant Menu Sign.** Restaurant menu signs shall be permitted in compliance with the following standards:

(1) Signs must be located adjacent to the business entrance;

(2) One (1) sign shall be allowed per business entrance;

(3) Signs shall not exceed six (6) sq. ft. maximum;

(4) Menus shall be located within a permanently mounted display area and protected from the elements;

(5) Menus may be illuminated from an exterior source only.

(r) **Rummage Sale and Seasonal Home Occupation Signs.** Signs announcing rummage sales or seasonal home occupations in accordance with Section 13-1-86 are permitted in compliance with the following:

(1) One (1) sign is allowed per street frontage.

(2) Signs may be located off-premises but must be on private property; such signs in the public right-of-way are prohibited.

(3) Signs may not exceed six (6) square feet per sign face, twelve (12) square feet per sign.

(4) Such signs may be erected no more than seven (7) days before and shall be removed within three (3) days after the announced sale.

(s) **Window Signs.** Window signs and other signs within a building provided such signs shall not occupy more than thirty percent (30%) of the window space.

(t) **Warning Signs.** Signs that provide warning messages, such as no trespassing or warning of electrical currents or animals.

(u) **Certain Non-Commercial Signs.** Signs containing non-commercial messages, such as those designating the location of public telephones, restrooms, restrictions on smoking, and restrictions of building entrances, provided that such signs do not exceed a maximum of four (4) square feet.

(v) **Certain Incidental Commercial Signs.** Vending machines, automatic tellers, gasoline pumps, and similar devices which display prices and/or the name, trademark, or logo of a company or brand, provided the display is an integral part of the device and does not exceed four (4) square feet in area per side of the device.

SEC. 13-1-63 PROHIBITED SIGNS.

(a) **Animated Signs.** Animated signs, including but not limited to the following:

(1) Signs having moving members or parts, excluding barber poles and time and temperature signs which do not contain commercial messages.

(2) Signs using high intensity or flashing lights.

(3) Signs or lighting which in any way simulate or could be confused with the lighting of emergency vehicles or traffic signals.

(b) **Bench Signs.** Signs attached to or painted on any bench that is located in any right-of-way or is in view from any right-of-way or public area.

(c) **Commercial Vehicle Signs.** Commercial vehicle signs as defined in Sec. 13-1-61.

(d) **Off-Premise Signs and Billboards.** Off-premise signs and billboards erected for the purposes of directing attention to a use, facility, activity, message, product, or service which is not conducted on or related to the premises upon which the sign is located, except as provided for in this ordinance.

(e) **Pole Signs.** Except as allowed in 13-1-67, a sign in which the bottom is not in contact with or close to the ground and that is mounted on a freestanding pole(s), column(s), or similar support.

(f) **Roof Signs.** Signs located on a roof or projecting above any portion of a roof or exterior wall of a structure.

(g) **Signs Obstructing Access or Egress.** Signs which obstruct free access or egress from any building, including those that obstruct any fire escape, required exit way, window, or door opening or that prevent free access to the roof by firefighters.

(h) **Signs in Vision Control Area.** Signs located in any vision control area as defined in Sec. 13-1-53, except signs that are three (3) feet or lower or are pole-mounted (with a pole diameter of twelve (12) inches or less) and maintain ten (10) feet in height to the bottom of the sign. This vision control area shall be applied to any intersection of street right-of-way, driveways, or combination thereof.

(i) **Signs in the Right-of-Way.** Signs placed in, or projecting into any public street right-of-way, with the exception of signage erected by any governmental body having jurisdiction over the right-of-way or as provided for in this ordinance.

(j) **Signs Painted on Walls.** Signs painted directly on an exterior building wall. Murals or artwork of a non-commercial nature are permitted.

SEC. 13-1-64 SIGN PERMITS REQUIRED.

(a) **Permit Required**. No person shall erect any sign in the City of Menasha without first having obtained the appropriate permit from the Zoning Administrator, except as provided for in this ordinance.

(b) **Exceptions.** A permit is not required for the following changes to existing signs with valid permits, however, a drawing or photo of the changes shall be submitted in order to update the sign permit:

(1) repainting of a sign message;

(2) a copy change or replacement of panels within an existing sign frame or cabinet;

(3) repair of a conforming sign with a valid permit.

(c) **Application**. Before construction of any sign(s) requiring a permit, applicants shall consult with the Zoning Administrator and submit an application that shall include:

(1) A completed permit application with the signature of the property owner.

(2) An accurate plot plan drawn to scale of the entire lot on which the sign(s) will be located.

(3) Location of buildings, parking lots, driveways, and landscaped areas on the lot.

(4) A table (or tables) containing:

a. Computation of the maximum total sign area;

b. Maximum area for individual signs;

c. Height and number of monument signs; and

d. Statement of the maximum total sign area and maximum number of signs permitted on the site by this Code.

(5) An accurate indication on the plot plan of the location and orientation of all existing signs, each sign for which a permit is requested, and the anticipated location of future signs requiring a permit.

(6) A description and illustration of the following:

a. Colors and materials to be used in sign construction (e.g., limestone base with bronze letters, etc);

b. Style of lettering for all signs;

c. Appearance/location of logos or icons;

d. Location of each sign on the building(s), with building elevations if necessary (e.g., over doors, over windows, awnings, etc);

e. All sign proportions; and,

f. Types of illumination (e.g., internally illuminated, or external illumination with description of type of outdoor light fixture).

(7) In addition, optional submittals may be required by the Zoning Administrator if deemed necessary due to the character of the proposed signs and/or site.

(d) **Permit Fees.**

(1) A permit fee established by the Common Council shall be paid to the City of Menasha for each sign permit issued under this Code.

(2) A fee shall not be charged for putting an existing sign into conformance with this ordinance or for a copy change as listed in 13-1-64(a).

(3) The fee does not include electrical permit fees, which shall be in addition to the sign permit fees listed in this section.

(4) Any person failing to obtain a sign permit prior to erecting a sign shall pay double permit fees.

(e) **Approval by Landmarks Commission.** Signs to be located in a designated historic district are subject to review and approval by the Landmarks Commission prior to the issuance of a sign permit.

(f) **Signs in Right-of-Way.** Permit applications for a sign which projects into a public right-of way as allowed in this ordinance must include the following:

(1) **Liability Agreement.** An agreement by the business and/or property owner to indemnify and hold harmless the City of Menasha for any damages or liabilities whatsoever resulting from the placement of such sign.

(2) **Revocation Agreement.** An agreement by the business and/or property owner that in the event it is deemed necessary to revoke the sign permit on the basis of a need to expand capacity, improve safety, or other reason related to the orderly use of the right-of-way, the City of Menasha may terminate the permit and order the sign to be removed according to the process outlined in Sec. 13-1-70(a).

(g) **Revocation of Permit; Appeal.** The Zoning Administrator, Building Inspector, and/or designee may at any time for a violation of this ordinance revoke a permit or require changes to bring the sign into conformance with this ordinance. Notice shall be given according to the process outlined in Sec. 13-1-70(a). The holder of a revoked permit shall be entitled to an appeal before the Board of Appeals.

SEC. 13-1-65 GENERAL SIGN REGULATIONS

(a) **Design.** Signs shall be designed to be compatible with the character of building materials and landscaping to promote an overall unified and aesthetic effect.

(b) **Maintenance.** Every sign shall be constructed and maintained in good structural condition at all times. All signs shall be kept neatly painted, stained, sealed, or preserved including all parts and supports.

(c) **Illumination.** Illumination of signs as permitted in Sec. 13-1-66 shall be subject to the following standards:

(1) Illumination of signs shall be directed or shaded so that the no direct rays shall:

a. interfere with the vision of persons on adjacent streets or properties

b. be directed onto adjacent residential uses or districts; or,

c. create a nuisance condition as determined by the Zoning Administrator and/or designee.

(2) Where internal illumination of signs is permitted, signs shall be designed to minimize the amount of light that is transmitted through the sign panel. The

display of white light should be limited to the sign copy. If lighting the sign copy only is not an option, the display of internal illumination through the background shall be controlled by one or more of the following:

a. limiting the illuminated background to 30% of the sign area;
b. changing the shape of the sign to reduce the lighted surface area,
c. using a dark color;
d. using an opaque screen.

(3) Underground wiring shall be required for illuminated signs not attached to a building.

(d) **Blanketing.** Blanketing of signs is prohibited.

(e) **Clearance Areas.**

(1) **Vehicle Area Clearance.** When a sign extends over a private area where vehicles travel or are parked, the bottom of the overhanging sign must be at least twelve (12) feet above the ground. Vehicle areas include but are not limited to driveways, alleys, parking areas, and loading and maneuvering areas.

(2) **Pedestrian Area Clearance.** When a sign extends over a sidewalk, walkway, or other space accessible to pedestrians, the bottom of the sign structure must be at least seven (7) feet above the ground.

(f) **Corner Lots.** Corner lot properties may choose one of the following options for monument signs:

(1) One sign may be placed along each street frontage in accordance with the standards for the zoning district; the permissible sign area for each sign shall be equal to the average linear feet of the both building exposures, not to exceed 125% of the shorter building exposure.

(2) In lieu of two signs, one sign may be erected not to exceed 125% of the permissible sign area based on the average of both building exposures and in accordance with the standards for the zoning district.

(g) **Transitional Areas.** Signs are prohibited within any transitional area required by Sec. 13-1-17.

(h) **Calculation of Sign Area.** Sign area shall be calculated as follows:

(1) **Calculation of Area of Individual Signs.** The allowable area of a sign face shall be measured by enclosing the most protruding points or edges of a sign within the smallest square, circle, rectangle, triangle, or combination thereof that will encompass the extreme limits of the writing, representation, emblem, or other display, together with any material, color, or decoration forming an integral part of the background of the display or used to differentiate the sign from the backdrop or structure against which it is placed. Such area shall not include any base, supports, bracing, supporting fence, or supporting wall when they are clearly incidental to the display itself.

(2) **Calculation of Area of Multi-faced Signs.** The allowable sign area for a sign with more than one face shall be computed by adding together the area of all sign faces visible from any one point. When two identical sign faces are placed back to back, so that both faces cannot be viewed from any point at the same time, and when such sign faces are part of the same sign structure and are not more than two (2) feet apart, the sign area shall be computed by measurement of one of the faces.

(i) **Computation of Height.** The allowable height of a sign shall be measured by calculating the distance from the base of the sign at normal grade to the top of the highest attached component of the sign. Normal grade shall be the lower of:

(1) the existing grade prior to construction; or,

(2) the newly established grade after construction, exclusive of any filling, berming, mounding, or excavating solely for the purpose of locating the sign.

(j) **Assignment of Allowable Sign Area - Multi-Tenant Buildings.** When the allowable area for signs is based on the linear feet of a building exposure, the allowable sign area may be assigned to each tenant as follows:

(1) allowable sign area multiplied by the percent of building exposure or building space occupied by each tenant;

(2) the allowable sign area divided by the number of tenants; or,

(3) the allowable sign area may be assigned at the discretion of the property owner.

SEC. 13-1-66 SIGN STANDARDS BY ZONING DISTRICT.

(a) All signs in the C-2 Central Business District shall be subject to the Downtown Menasha Sign Design Guidelines as adopted by the Common Council.

(b) The following charts list standards by zoning district for signs that require a sign permit:

Zoning District	**Sign Type Permitted**	**Restrictions** see Sec. 13-1-67	**Allowable Sign Area per Building Exposure**	**Min & Max Sign Area/ Business***	**Max #**	**Max Height**	**Setback** see Sec. 13-1-65(e)
A-1, R-1, R-2, R2-A (2 unit only)	wall (for general home occupations only)	no illumination	2 sq. ft./sign	NA	1/unit	below 2nd floor windows or 20', whichever is less	NA
R-2A (3+ units), R-3, R-4	monument	external illumination only	32 sq. ft./sign face, not to exceed 64 sq. ft./sign	NA	1/street frontage; see Sec. 13-1-65(f) for corner lots	10'	2'
Special Use: A-1, R-1, R-2, R-2A, R-3, R-4	wall	external illumination only	1 sq. ft. for each linear ft. of the building exposure	at least 20 sq. ft., not to exceed 50 sq. ft.	allowable sign area may be applied per building exposure	below 2nd floor windows or 20', whichever is less	NA
	monument	external illumination only	32 sq. ft./sign face, not to exceed 64 sq. ft./sign		1/street frontage; see Sec. 13-1-65(f) for corner lots	10'	10'

* The aggregate maximum sign area per business may not exceed the allowable sign area per building exposure. In order to accommodate businesses with very narrow building exposures, a minimum sign area per business is granted for certain types of signs. A sign smaller than the minimum may be erected subject to the requirements of this ordinance.

Zoning District	**Type Permitted**	**Restrictions** (See Sec. 13-1-67)	**Allowable Sign Area per Building Exposure**	**Min & Max Sign Area per Business***	**Max#**	**Max Height**	**Setback** see Sec. 13-1-65(e)
C-1, I-1, I-2	wall - ground floor businesses, including awning, canopy, and marquee		1 sq. ft. for each linear ft. of the building exposure	at least 20 sq. ft, not to exceed 300 sq. ft.	allowable sign area may be applied per building exposure	top of wall	NA
	wall - upper floor businesses and/or tenant directory		8 sq. ft.	NA	1/entrance	at entrance, below 2nd floor windows or 20', whichever is less	NA
	monument (see Sec. 13-1-67 for electronic message centers)		1 sq. ft./sign face for each linear ft. of the building exposure, not to exceed 200 sq. ft.	not to exceed 75 sq. ft/sign face for 1st business, 50 sq. ft./sign face for each business thereafter	1/street frontage; see Sec. 13-1-65(f) for corner lots	16'	2'
	business center	requires Special Use Permit	not to exceed 200 sq. ft.	not to exceed 75 sq. ft/sign face for 1st business, 50 sq. ft./sign face for each business thereafter	1/business center entrance	16'	per Special Use Permit
	projecting - ground floor businesses	external or back lit/halo illumination only	25 sq. ft./sign face, not to exceed 50 sq. ft./sign	NA	1/business	below 2nd floor windows or 20', whichever is less	NA
	projecting - upper floor businesses or tenant directory	external or back lit/halo illumination only	8 sq. ft.	NA	1/entrance	at entrance below 2nd floor windows or 20', whichever is less	NA

* The aggregate maximum sign area per business may not exceed the allowable sign area per building exposure. In order to accommodate businesses with very narrow building exposures, a minimum sign area per business is granted for certain types of signs. A sign smaller than the minimum may be erected subject to the requirements of this ordinance.

Zoning District	**Type Permitted**	**Restrictions** (See Sec. 13-1-67)	**Allowable Sign Area per Building Exposure**	**Min & Max Sign Area per Business***	**Max#**	**Max Height**	**Setback** see Sec. 13-1-65(e)
C-1, I-1, I-2 adjacent STH 441 frontage	wall		1 sq. ft. for each linear ft. of the building exposure	at least 20 sq. ft, not to exceed 500 sq. ft.	1/business on building exposure facing STH 441 only	top of wall	NA
	monument		1 sq. ft./sign face for each linear ft. of the building exposure, not to exceed 200 sq. ft.	not to exceed 100 sq. ft/sign face for first business, 50 sq. ft./sign face for each business thereafter	1/lot	16'	2'
	pole	See Sec. 13-1-67	1 sq. ft./sign face for each linear ft. of the building exposure, not to exceed 300 sq. ft./sign face	not to exceed 150 sq. ft/sign face for first business, plus 50 sq. ft./sign face for each business thereafter	1/lot facing STH 441	16' above STH 441 centerline grade	2'

* The aggregate maximum sign area per business may not exceed the allowable sign area per building exposure. In order to accommodate businesses with very narrow building exposures, a minimum sign area per business is granted for certain types of signs. A sign smaller than the minimum may be erected subject to the requirements of this ordinance.

Zoning District	Type Permitted	Restrictions (See Sec. 13-1-67)	Allowable Sign Area per Building Exposure	Min & Max Sign Area per Business*	Max#	Max Height	Setback see Sec. 13-1-65(e)
C-2	wall - ground floor businesses, including awning, canopy, and marquee	external or back lit/halo illumination only	1 sq. ft. for each linear ft. of the store front	at least 10 sq. ft., not to exceed 50 sq. ft.	allowable sign area may be applied per store front	below 2nd floor windows or 20', whichever is less	NA
	wall - upper floor businesses and/or tenant directory	external or back lit/halo illumination only	8 sq. ft.	NA	1/entrance	at entrance below 2nd floor windows or 20', whichever is less	NA
	projecting - ground floor businesses	external or back lit/halo illumination only	1 sq. ft for each linear ft. of store front, not to exceed 25 sq. ft./sign face	NA	1/business	below 2nd floor windows or 20', whichever is less	NA
	projecting - upper floor businesses or tenant directory	external or back lit/halo illumination only	8 sq. ft.	NA	1/entrance	at entrance below 2nd floor windows or 20', whichever is less	NA
	monument	external or back lit/halo illumination only	1 sq. ft/sign face for each linear ft. of the building exposure; not to exceed 50 sq. ft.	NA	1/street frontage, see Sec. 13-1-65(f) for corner lots	8'	2'
	business center	requires Special Use Permit	not to exceed 100 sq. ft.	not to exceed 50 sq. ft/sign face for 1st business, plus 25 sq. ft./sign face for each business thereafter	1/business center entrance	8'	per Special Use Permit
	sidewalk	see Sec. 13-1-67	8 sq. ft./sign face, 16 sq. ft./sign	NA	1/business	6'	see Sec. 13-1-67

* The aggregate maximum sign area per business may not exceed the allowable sign area per building exposure. In order to accommodate businesses with very narrow building exposures, a minimum sign area per business is granted for certain types of signs. A sign smaller than the minimum may be erected subject to the requirements of this ordinance.

Zoning District	Type Permitted	Restrictions (See Sec. 13-1-67)	Allowable Sign Area per Building Exposure	Min & Max Sign Area per Business*	Max#	Max Height	Setback see Sec. 13-1-65(e)
C-3, C-4	wall - ground floor businesses, including awning, canopy, and marquee	for retail uses, the C-1 standards for wall signs shall apply	1 sq. ft. for each linear ft. of the building exposure	at least 20 sq. ft., not to exceed 75 sq. ft.	allowable sign area may be applied per building exposure facing a street or customer parking lot	below 2nd floor windows or 20', whichever is less	NA
	wall - upper floor businesses or tenant directory	external or back lit/halo illumination only	8 sq. ft.	NA	1/entrance	at entrance below 2nd floor windows or 20', whichever is less	NA
	monument	for retail uses, the C-1 standards for monument signs shall apply	1 sq. ft./sign face for each linear ft. of the building exposure; not to exceed 100 sq. ft.	not to exceed 50 sq. ft./sign face for 1st business, 25 sq. ft./sign face for each business thereafter	1/street frontage, see Sec. 13-1-65(f) for corner lots	16'	2 ft
	business center	requires Special Use Permit	not to exceed 100 sq. ft.	not to exceed 50 sq. ft/sign face for 1st business, 25 sq. ft./sign face for each business thereafter	1/business center entrance	16'	per Special Use Permit
	projecting - ground floor businesses	external or back lit/halo illumination only	1 sq. ft for each linear ft. of store front, not to exceed 25 sq. ft./sign face	NA	1/business	below 2nd floor windows or 20', whichever is less	NA
	projecting - upper floor businesses or tenant directory signs	external or back lit/halo illumination only	8 sq. ft.	NA	1/entrance	at entrance below 2nd floor windows or 20', whichever is less	NA

* The aggregate maximum sign area per business may not exceed the allowable sign area per building exposure. In order to accommodate businesses with very narrow building exposures, a minimum sign area per business is granted for certain types of signs. A sign smaller than the minimum may be erected subject to the requirements of this ordinance.

SEC. 13-1-67 REQUIREMENTS BY SIGN TYPE

(a) **Accessory Structure Signs.** Signs may be placed on the walls of accessory structures facing a street or customer parking lot, but the sign area used shall be deducted from the allowable wall sign area for the building exposure of the primary building.

(b) **Awnings/Canopies/Marquees.** Awning, canopy, and marquee signs shall be permitted subject to the following standards:

(1) In the C-2 Central Business District, they may project into the public right-of-way, but may not be erected closer than three (3) feet to any street curb line.

(2) A minimum clearance of seven (7) feet shall be maintained from ground level.

(3) They shall not extend above the roof or parapet of the structure to which it is attached.

(4) Any text, logos, or other graphic representation qualifying as a sign which is placed on an awning, canopy, or marquee shall be included within the calculation of total allowable wall sign area and are subject to the requirements of this ordinance.

(5) Marquee signs shall be limited to buildings occupied by theaters, cinemas, performing arts facilities, or parking structures.

(c) **Business Center Signs.** Business center signs shall be permitted subject to the following standards:

(1) Signs shall require a Special Use Permit and are intended to identify the entrance, the name of the business center, and/or the names of businesses within the business center.

(2) The boundaries of the business center shall be determined through review and approval of the Special Use Permit.

(3) Business center signs shall keep the first two (2) feet of the sign closest to the ground free of sign copy for the purposes of snow storage and landscaping. This portion of the sign shall not be counted toward the calculation of allowable sign area.

(4) The maximum height of the sign base shall be no more than 1/3 the total sign height.

(5) In granting a Special Use Permit, additional conditions may be required depending on the unique conditions of the business center and surrounding area. These conditions may include, but are not limited to:

a. location
b. design details
c. colors
d. materials
e. illumination
f. size
g. height
h. landscaping
i. number of businesses identified

(6) Electronic message centers are prohibited.

(d) **Electronic Message Centers.** Signs whose informational content can be changed or altered by electronic means shall be subject to the following standards:

(1) Electronic message centers shall only be allowed in the C-1, I-1, and I-2 districts. Electronic message centers shall require a Special Use Permit if they are located within two hundred (200) feet of either of the following:
   a. a residential use or district;
   b. any property use that requires a Special Use Permit.

(2) Electronic message centers shall be allowed on monument signs only and are subject to all monument sign requirements of the applicable zoning district.

(3) The sign shall be equipped with photosensitive equipment which automatically adjusts the brightness and contrast of the sign in direct relation to the ambient outdoor illumination. The sign must not exceed a maximum illumination of 5,000 nits (candelas per square meter) during daylight hours and a maximum illumination of 500 nits (candelas per square meter) between dusk to dawn as measured from the sign's face at maximum brightness.

(4) Electronic message centers shall be integral to and a part of the original approved monument sign and may not comprise more than 30% of the sign face. Static displays consisting only of letters or numerals that are not changed more than once in a 24-hour period shall not be included in the area computation of the electronic message center. The combined square footage of the electronic message center plus any static display area may not comprise more than 75% of the total allowable square footage.

(5) Each message displayed on an electronic message center must be static or depicted for a minimum of 2 seconds. The minimum allowed if using a special entrance/exit method that does not violate 13-1-67(g)(4) above is 1.3 seconds.

(6) Electronic message centers shall not utilize animation, chasing, flashing, scintillation, scrolling or running messages, fade, or any other effect which depicts movement or is intended to draw attention to the sign.

(7) Multi-colored electronic message centers are prohibited.

(8) Including an electronic message center as part of a permanent sign will prohibit the use of any portable signs (as defined in Sec. 13-1-61) containing commercial messages.

(9) Electronic message centers shall not display off-premise commercial advertising.

(10) The Zoning Administrator shall inspect annually or at such other times as deemed necessary each electronic message center for the purpose of ascertaining whether the software settings are in compliance with the requirements of this Code. The owner of the electronic message center shall pay to the City of Menasha an annual inspection fee in an amount established by the Common Council.

(e) **Monument Signs.** Monument signs shall be permitted subject to the following standards:

(1) Monument signs shall keep the first two (2) feet of the sign closest to the ground free of sign copy for the purposes of snow storage and landscaping. This portion of the sign shall not be counted toward the calculation of allowable sign area.

(2) Monument signs must incorporate design details, materials, and colors of the associated building(s). EIFS shall not be allowed on the bottom 3 feet.

(3) The maximum height of the sign base shall be no more than 1/3 the total sign height.

(f) **Pole Signs.** Pole signs are allowed on properties zoned C-1, I-1, or I-2 that directly abut WIS 441. Pole signs shall be subject to the following standards:

(1) The structure shall be constructed on no less than two columns which must be designed to incorporate design details, materials, and colors of the associated building(s). **EIFS** shall not be allowed on the bottom 3 feet. Poles shall be shrouded and integrated into the overall sign design.

(2) Maximum height of a pole sign is sixteen (16) feet above the WIS 441 centerline grade directly adjacent to the subject property.

(3) Individual tenant sign panels should be uniform in size, recognizing that the major tenant, or the name of the center may have a slightly larger sign panel.

(4) Sign panels shall not extend more than two (2) feet beyond the width of the architectural support elements on the sign.

(5) Electronic Message Centers are prohibited.

(g) **Projecting Signs.** Projecting signs shall be subject to the following standards:

(1) They shall project from the wall at an angle of ninety (90) degrees.

(2) A minimum clearance of seven (7) feet shall be maintained from ground level.

(3) No projecting sign may be erected within twenty (20) feet of any other projecting sign; however, this provision shall not deny any place of business at least one (1) projecting sign.

(4) In the C-2 Central Business District, such signs may project into the public right-of-way, but may not be erected closer than three (3) feet to any street curb line.

(h) **Sidewalk Signs in the C-1 General Commercial District.** Sidewalk signs may be placed in the C-1 General Commercial District subject to the following limitations:

(1) Number of Signs Allowed.

a. The number of signs shall be limited to one (1) per building exposure per business with direct street and/or public area entry. Multi-tenant buildings are allowed a total of three sidewalk signs per street and/or public area entry. No business shall be displayed on more than one sign per street or public area entry.

b. When a sidewalk sign is in use for a business, no other temporary signage on the property may be in use for said business.

c. Sidewalk signs are not permitted on parcels with electronic message centers.

(2) Design.

a. Sidewalk signs shall be a sandwich board type ("A-frame") with multiple (minimum of 2) or one continuous hinge across the top.

b. Signs must be portable.

c. Signs shall not exceed a width of two and one-half feet.

d. Removable signage panels on thin sign board material such as; aluminum, Centrex, or other quality sign grade material, shall be attached to the sign frame with screws or through the use of slide rails – no Velcro, staples, or double-sided tape. Cardboard or paper as sign materials shall not be permitted.

e. Interchangeable letters or letter copy on rails are discouraged.

f. Sidewalk signs shall not be illuminated, animated, have moving parts, or electrically powered in any way.

g. Windblown devices such as balloons, banners, or other similar items shall not be attached or otherwise made part of the sidewalk sign.

h. Signs shall contain a device such as a chain, rope, or cable to prevent the sign panels from spreading.

i. Signs shall not have more than two (2) sign faces.

j. Sidewalk signs shall be free standing, internally weighted and shall not be anchored or affixed to any sidewalk, light pole, sign, traffic signal, bench, newspaper vending box, planting structure or similar structure or appurtenances. The signs shall be placed at sidewalk grade level and shall not be placed on planters, walls, curbs or any similar structure.

(3) Materials.

a. Signs shall be constructed using quality exterior sign board materials, wood or other durable material.

b. All wood and metal shall be painted or stained.

c. All signs shall be professionally printed or painted, changeable copy that is hand lettered shall comprise no more than 75% of the sign face.

(4) Location and Removal.

a. Placement is allowed on landscaped areas in front of the business, between building frontage and sidewalk or in terrace space of the right-of-way when the terrace is larger than forty-eight (48) inches.

b. All signs must be removed after the conclusion of business hours each day and are allowed only from 5:00 a.m. to 10:00 p.m.

c. Signage shall not obstruct the ingress/egress of parked vehicles.

d. Signs placed near points of ingress/egress will be subject to vision control review.

e. When multiple signs are placed on one parcel, signs shall have a minimum clear spacing of twenty-five (25) feet between signs.

f. Sidewalk signs shall not be anchored or affixed to any sidewalk, light pole, sign, traffic signal, bench, newspaper vending box, planting structure or other similar structure or appurtenances. The signs shall be placed at sidewalk grade level and shall not be placed on planters, wall, curbs or any similar structure.

(5) General Condition of Signs.

a. To keep signs legible and functional, all sidewalk signs shall be maintained and kept free of peeling or fading paint or vinyl.

b. Any signs which have become deteriorated due to lapse of time, weather, or other reason may be ordered to be removed by the Zoning Administrator and/or designee according to the process outlined in Sec. 13-1-70(a).

(i) **Sidewalk Signs in the C-2 Central Business District.** Sidewalk signs may be placed in the C-2 Central Business District subject to the following limitations:

(1) Number of Signs Allowed.

a. The number of signs shall be limited to one (1) per building exposure per business with direct street and/or public area entry. Multi-tenant buildings are allowed a total of three sidewalk signs per street and/or public area entry. No business shall be displayed on more than one sidewalk sign per street or public area entry.

b. When a sidewalk sign is in use for a business, no other temporary signage on the property may be in use for said business.

(2) Design.

a. Design of such signs ~~in the C-2 district~~ in a designated historic district shall be subject to approval of the Landmarks Commission.

b. Sidewalk signs shall be a sandwich board type ("A-frame") with multiple (minimum of 2) or one continuous hinge across the top.

c. Signs must be portable.

d. Signs shall not exceed a width of two and one-half feet.

e. Removable signage panels on thin sign board material such as; aluminum, Centrex, or other quality sign grade material, shall be attached to the sign frame with screws or through the use of slide rails – no Velcro, staples, or double-sided tape. Cardboard or paper as sign materials shall not be permitted.

f. Interchangeable letters or letter copy on rails are discouraged.

g. Sidewalk signs shall not be illuminated, animated, have moving parts, or electrically powered in any way.

h. Windblown devices such as balloons, banners, or other similar items shall not be attached or otherwise made part of the sidewalk sign.

i. Signs shall contain a device such as a chain, rope, or cable to prevent the sign panels from spreading.

j. Signs shall not have more than two (2) sign faces.

k. Signs shall be free standing, internally weighted and shall not be anchored or affixed to any sidewalk, light pole, sign, traffic signal, bench, newspaper vending box, planting structure or similar structure or appurtenances. The signs shall be placed at sidewalk grade level and shall not be placed on planters, walls, curbs or any similar structure.

(3) Materials.

a. Sign materials ~~in the C-2 district~~ in a designated historic district shall be subject to approval of the Landmarks Commission.

b. Signs shall be constructed using quality exterior sign board materials, wood or other durable material.

c. All wood and metal shall be painted or stained.

d. All signs shall be professionally printed or painted, changeable copy that is hand lettered shall comprise no more than 75% of the sign face.

(4) Location and Removal.

a. Signs shall be located within twenty (20) feet of the building exposure whose business name, goods, or services are being offered.

b. Such signs may be placed in the first four (4) feet adjacent to the building or the first 4 (4) feet adjacent to the curb. Signage shall not obstruct the ingress/egress of parked vehicles. A minimum of four (4) feet of sidewalk shall remain open between the sign and any other impediment to pedestrian movement.

c. All signs must be removed from the public right-of-way after the conclusion of business hours each day and are allowed only from 5:00 a.m. to 10:00 p.m.

d. When multiple signs are placed on one parcel, signs shall have a minimum clear spacing of twenty-five (25) feet between signs.

e. Signs shall not be anchored or affixed to any sidewalk, light pole, sign, traffic signal, bench, newspaper vending box, planting structure or other similar structure or appurtenances. The signs shall be placed at sidewalk grade level and shall not be placed on planters, wall, curbs or any similar structure.

(5) General Condition of Signs.

a. To keep signs legible and functional, all sidewalk signs shall be maintained and kept free of peeling or fading paint or vinyl.

b. Any signs which have become deteriorated due to lapse of time, weather, or other reason may be ordered to be removed by the Zoning Administrator and/or designee according to the process outlined in Sec. 13-1-70(a).

(j) **Wall Signs.** Wall signs shall be subject to the following standards:

(1) They shall not project more than twelve (12) inches from the building surface.

(2) They shall not extend above the lowest point of the roof, nor beyond the ends of the wall to which it is attached.

(3) They shall not obscure architectural features of the building, including but not limited to windows, arches, sills, moldings, cornices, and transoms.

(4) For multiple story building in the C-2 Central Business District and C-3 Business and Office District, wall signs shall only be permitted as follows (except as provided for in this ordinance):

a. on the building sign frieze;

b. on a window;

c. on an awning, canopy, or marquee;

d. on a first story panel; and,

e. in the area between the first floor and the window sill of the second story window; if no windows are present, then no higher than twenty (20) feet.

SEC. 13-1-68 NONCONFORMING SIGNS.

(a) **Legal Nonconforming Status.** Any sign located within the City of Menasha limits as of the date of adoption of this ordinance or located in an area annexed to the City of Menasha hereafter which does not conform with the provisions of this ordinance shall be considered a legal nonconforming sign and may be permitted to remain in accordance with this ordinance as long as the sign is properly maintained and not detrimental to the health, safety, and welfare of the community.

(b) **Loss of Legal Nonconforming Status.**

(1) A sign shall lose its legal nonconforming status when one or more of the following occurs:

a. the business, event, or use ceases and the building, unit of the building, or property remains vacant for a period of ninety (90) days;

b. the sign is expanded or changed to another nonconforming sign;

c. the sign is removed or relocated to another site;

d. the sign is altered so as to change the shape, size, type, placement, or design of its structural or basic parts;

e. the sign is enhanced with any new feature, including the addition of illumination;

f. the sign is repaired, except if such repair brings the sign into conformance with this ordinance, when such repair involves the following:

1. the replacement of both the sign frame and sign panels;

2. the replacement of the primary support poles or other support structure;

3. for signs without framework for sign panels, requires replacement of the sign panels.

(2) A sign that loses its legal nonconforming status shall be immediately brought into compliance with this ordinance with a new permit secured or shall be removed. The Zoning Administrator and/or designee shall order the removal or repair of such sign according to the process outlined in Sec. 13-1-70(a).

(c) **Permitted Modifications.** Routine repairs are permitted in order to maintain the sign in a safe and aesthetic condition exactly as it existed at the time of the enactment of the ordinance. A change of sign copy or replacement of sign panels within an existing sign frame is permitted except as provided herein.

(d) **Elimination of Nonconforming Signs.** The City of Menasha may acquire by purchase, condemnation, or by other means any nonconforming sign which is deemed necessary to preserve the health, safety, and welfare of the city's residents.

(e) **Annual Billboard/Off-Premise Sign Inspection.** The Zoning Administrator and/or designee shall inspect annually or at such other times as deemed necessary each existing billboard or off-premise sign for the purpose of ascertaining whether the same is secure or insecure and whether it is in need of removal or repair. The owner of the billboard or off-premise sign shall pay to the City of Menasha an annual inspection fee in an amount established by the Common Council.

SEC. 13-1-69 ABANDONED, DANGEROUS, UNSAFE, AND ILLEGALLY ERECTED SIGNS.

(a) **Abandoned Signs.**

(1) When a business, event, or use ceases and the building, unit of the building, or property remains vacant for a period of thirty (30) days or more, the property owner shall be required to:

a. remove all signs advertising the former business, event, or use (including any frame, support poles, wiring, etc.); or,

b. if applicable, install blank panels in the sign frames.

(2) The provisions of Sec. 13-1-68(b) shall apply to abandoned nonconforming signs.

(b) **Dangerous Signs.** Any sign constituting an immediate hazard to health or safety shall be deemed a public nuisance by the Zoning Administrator and/or designee and may be removed by the city according to the process outlined in Sec. 11-7-5 and the cost thereof charged against the owner of the property on which it was installed. If the property owner fails to pay for such costs, the costs shall be placed as a special tax on the property and entered on the tax rolls.

(c) **Unsafe Signs.** Any sign that is determined by the Zoning Administrator and/or designee to be unsafe, but not representing an immediate health or safety hazard, shall be removed or repaired according to the process outlined in Sec. 13-1-70(a).

(d) **Illegally Erected Signs.** The Zoning Administrator and/or designee shall order the removal of any sign erected illegally in violation of this ordinance, according to the process outlined in Sec. 13-1-70(a). Persons erecting a sign prior to securing a sign permit shall be given notice to submit a sign permit application according to the process outlined in Sec. 13-1-70(a).

SEC. 13-1-70 ENFORCEMENT PROCESS.

(a) **Enforcement Process.** The Zoning Administrator and/or designee shall have the authority to enforce the provisions of this ordinance and issue orders related to and promoting the purposes of this ordinance. The provisions of the sign ordinance shall be enforced according to the following procedures:

(1) Notice of the violation or required action shall be sent by certified mail addressed to the property owner and/or permit holder at the last known address.

(2) The notice shall describe the violation or required action and allow the following time period for removal, repair, or completion of the required action:

a. fifteen (15) days for violations of portable or temporary sign requirements, failure to secure a sign permit, and repair or removal of unsafe signs;

b. thirty (30) days for all other violations, required actions, or permit revocations.

(3) Should the sign not be removed or repaired or the required action completed within the time specified, the Zoning Administrator and/or designee shall have the authority to remove the sign, and the property owner shall be liable for the cost thereof. If the property owner fails to pay for such costs, the costs shall be placed as a special tax on the property and entered on the tax rolls.

(b) **Exceptions.** Signs illegally located in the right-of-way may be removed by the City of Menasha and held for a period of thirty (30) days. The owner of said sign(s) may recover the sign after paying a fee in an amount established by the Common Council. If the owner does not recover the sign(s) held by the city within the specified time period, the sign will be destroyed.

(c) **Penalties.** Failure to comply with the standards specified in this ordinance may subject the property owner and/or permit holder to the penalties listed in Sec. 1-1-7.

(d) **Appeal.** Decisions by the Zoning Administrator and/or designee based on this ordinance shall be subject to appeal to the Board of Appeals.

SECTION 2: This ordinance shall become effective upon its passage and publication as provided by law.

Passed and approved this _____th day of June, 2009.

_____
Donald Merkes, Mayor

ATTEST:

_____
Deborah A. Galeazzi, City Clerk

O -XX- 09

AN ORDINANCE RELATING TO COMPREHENSIVE PLAN AMENDMENTS

Introduced by Ald. _____ at the recommendation of the Plan Commission.

The Common Council of the City of Menasha does ordain as follows:

SECTION 1: Section 2-4-5 is repealed and recreated to read as follows:

SEC. 2-4-5 CITY PLAN COMMISSION.

(a) **COMPOSITION.** The Plan Commission shall consist of seven (7) voting members as follows: The Mayor, one (1) Alderman, Director of Public Works, Chairperson of the Parks and Recreation Board and three (3) citizens.

(b) **APPOINTMENT.**

(1) Election/Appointment of Alderman Members. At its annual meeting in April of each year the Common Council shall, by two-thirds vote of its members, elect one (1) of its number as member of the City Plan Commission for a period of one (1) year from and after the first day of May next ensuing.

(2) Appointment and Terms of Citizen Members. The Chairperson of the Parks and Recreation Board shall have a one (1) year term. The three (3) citizen members shall be appointed by the Mayor and confirmed by the Common Council to hold office for a period ending respectively one (1), two (2) and three (3) years thereafter from the succeeding first of May. Annually during April, members shall be appointed for a term of three (3) years.

(c) **ORGANIZATION OF COMMISSION.** The Mayor shall serve as presiding officer. The Plan Commission shall organize by the election of a vice-chairman and such other officers as may in their judgment be necessary. The Plan Commission shall receive such compensation as determined by the Common Council.

(d) **VACANCIES.** Vacancies shall be filled by appointment for the remainder of the unexpired term in the same manner as appointment for the full term.

(e) **COMPENSATION.** No compensation shall be paid for service on the Commission. Citizen members shall take the official oath as required by Sec. 19.01, Wis. Stats., said oath to be filed with the City Clerk.

(f) **RECORD.** The Plan Commission shall keep a written record of its proceedings to include all actions taken, a copy of which shall be filed with the City Clerk. Four (4) members shall constitute a quorum but all actions shall require the affirmative approval of a majority of the members present of the Commission.

(g) **DUTIES.** The Plan Commission shall have the following duties and powers:

(1) Mandatory Referrals to Commission. The Common Council or officer of the City having final authority thereon shall refer to the Plan Commission, for its consideration and report before final action is taken by the Council, public body or officer, the following matters: the location of any statue or other memorial; the location, acceptance, extension, alteration, vacation, abandonment, change of use, sale, acquisition of land for or lease of land for any street, alley or other public ways, park, playground, airport, area for parking vehicles, or other memorial or public grounds; the location, extension, abandonment or authorization for any public utility whether publicly or privately owned; all plats of lands in the City or within the territory

over which the City is given platting jurisdiction by Chapter 236, Wis. Stats.; the location, character and extent or acquisition, leasing or sale of lands for public or semi-public housing, slum clearance, relief of congestion, or vacation camps for children; and the amendment or repeal of any land use ordinance. Unless such report from the Commission is made within thirty (30) days, or such longer period as may be stipulated by the Common Council, the Council or other public body or officer may take final action without it.

(2) Miscellaneous Powers. The Commission may make reports and recommendations relating to the plan and development of the City to public officials and agencies, public utility companies, civic, educational, professional and other organizations and citizens. It may recommend to the Common Council programs for public improvements. All public officials shall, upon request, furnish to the Commission, within a reasonable time, such available information as it may require for its work. The Commission, its members and employees, in the performance of its functions, may enter upon any land, make examinations and surveys, and place and maintain necessary monuments and markers thereon. In general, the Commission shall have such powers as may be necessary to enable it to perform its functions and promote municipal planning in cooperation with the Common Council.

(3) The Comprehensive Plan.

a. Purpose. The purpose of this section is to provide procedures and criteria for creating, adopting, amending, and updating the City of Menasha Comprehensive Plan. The Plan Commission may create, adopt, and, as necessary, amend, extend or add to the Comprehensive Plan, subject to Common Council confirmation, for the physical development of the City including areas outside of its boundaries which, in the Plan Commission's judgment, bear relation to the development of the City.

b. Applicability. This section shall apply to the creation, adoption, amendment, and updating to any elements of the City of Menasha Comprehensive Plan.

c. Comprehensive Plan Elements. The Comprehensive Plan, with the accompanying maps, plats and descriptive and explanatory matter, shall show the Commission's recommendations for such physical development, and shall include, among other things without limitation because of enumeration, the following elements as required by State of Wisconsin planning law (§66.1001):

1. Issues and opportunities element
2. Housing element.
3. Utilities and community facilities element
   Agricultural, natural and cultural resources element.
5. Economic development element.
6. Intergovernmental cooperation element.
7. Land−use element.
8. Implementation element.

d. Comprehensive Plan Adoption.

1. The Commission shall create and adopt the Comprehensive Plan in accordance with Wisconsin State planning laws (§66.1001).

2. The Comprehensive Plan adopted under this subsection shall be updated no less than once every 10 years in accordance with Wisconsin State planning laws (§66.1001).

e. Comprehensive Plan Amendments.

1. Applicability. The criteria and requirements of this section shall apply to all applications or proposals for changes to the comprehensive plan text, goals, objectives, policies, map designations, or other map changes unless specifically exempted. The following types of comprehensive plan amendments may be considered through the comprehensive plan amendment process:
   - (i) Future Land Use map changes including land use and growth boundaries;
   - (ii) Minor technical Future Land Use map corrections;
   - (iii) Future Land Use or other text changes;
   - (iv) Changes or corrections to other maps within the plan;
   - (v) The amendment or adoption of the Utilities and Community Facilities element of the comprehensive plan that occurs concurrently with the adoption or amendment of the city budget; and,
   - (vi) Amendments necessary to address an emergency situation.

2. Procedure.
   - (i) In November of each year, the Community Development Department shall publish notice in the official city newspaper to announce the City of Menasha Comprehensive Plan amendment process is open to accepting applications. At that time, the Community Development Department will invite public comments and suggestions regarding changes to the comprehensive plan.
   - (ii) Applications for all comprehensive plan amendments shall be considered legislative actions and be subject to the procedures in this section.
   - (iii) Applicants proposing Future Land Use Map changes must schedule a pre-application meeting with staff.
   - (iv) Applications shall be submitted to the Community Development Department in writing by the last working day of December in order to be considered during the annual review process.
   - (v) A fee established by the Common Council must accompany the following changes:
     - a. Future Land Use map changes including land use and growth boundaries;
     - b. Future Land Use or other text changes;
   - (vi) Two public hearings shall be scheduled and held: an informal public hearing before the Plan Commission and a formal public hearing before the

Common Council. They shall be noticed as follows:

- Informal Public Hearing. For all amendments, a Class One (1) notice shall be published in the official city newspaper at least seven (7) days prior to the informal public hearing. Additionally, for amendments specific to a property or properties, property owners within one hundred feet (100') of the subject property or properties shall be notified by first class mail at least seven (7) days prior to the hearing.
- Formal Public Hearing. For all amendments, a Class One (1) notice shall be published in the official city newspaper at least thirty (30) days prior to the formal public hearing. Additionally, for amendments specific to a property or properties, property owners within one hundred feet (100') of the subject property or properties shall by notified by first class mail at least thirty (30) days prior to the hearing. Said notice may be sent together with the notice for the informal public hearing.

(vii) The Plan Commission shall, by resolution (§66.1001(4)(b)), make a recommendation to the Common Council within thirty (30) days of the date of the review meeting or the Common Council may take action without it.

(viii) The Common Council shall have the authority to approve or deny the proposed amendment(s). Amendments may not take effect until the Common Council enacts an ordinance that adopts the amendment(s) (§66.1001(4)(c)).

(ix) Copies of the adopted amendment(s) shall be sent to the reviewing authorities as required by State of Wisconsin planning law (§66.1001) within 30 days of adoption.

3. Submittal Requirements**.** All requests for comprehensive plan amendments shall be made in writing, using forms supplied by the Community Development Department, and shall include the information listed below. The Department of Community Development, Plan Commission and/or the Common Council may require additional information be submitted before taking action.

(i) Future Land Use map amendments:

- Completed application form, signed by the applicant or owner.
- Property map showing adjacent properties and clearly outlining the subject parcel(s).

- Where the property is not owned by the applicant, a letter from the owner giving consent to apply for the comprehensive plan amendment.

(ii) A description of the purpose of the comprehensive plan amendment.

(iii) Justification and support for the proposed map amendment.

(iv) All other amendments:

(v) Completed application form.

4. Approval Criteria.

(i) Approval for Future Land Map Changes. To change a designation, the proposed Future Land Use map amendment must meet at least one of the following criteria listed below. Additional documentation may be needed to address the public facilities, needs, and services that may be necessary to support the proposed designation. Such services may include water, sanitary sewer, storm drainage, transportation (all modes), police and fire protection, and schools.

- Respond to a substantial change in conditions beyond the property owner's control applicable to the area within which the subject property lies;
- Better implement applicable comprehensive plan policies than the current map designation;
- Correct an obvious mapping error;
- Address an identified deficiency in the Comprehensive Plan.

(ii) Approval Criteria for Amendments to Text and Other Maps. To change text, including goals, objectives and policies, or any map other than the Future Land Use Map, the amendment must meet at least one of the criteria below:

- Better implement applicable comprehensive plan policies;
- Correct errors;
- Replace outdated data;
- Address an opportunity for physical, economic, social or cultural improvement of the city.

(iii) The comprehensive plan amendment(s) shall take into consideration the comprehensive plans adopted by neighboring communities, the East Central Wisconsin Regional Planning Commission, Calumet and Winnebago Counties, and relevant regional issues.

(iv) Comprehensive plan text amendments and amendments to other maps within the plan shall be consistent with the State of Wisconsin

comprehensive planning law (§66.1001).

ORDINANCE O-__-09

AN ORDINANCE RELATING TO HEIGHT, SETBACK, AND AREA EXCEPTIONS

Introduced by Ald. _____ at the recommendation of the Plan Commission.

The Common Council of the City of Menasha does ordain as follows:

SECTION 1: Article B, SEC.13-1-14(k) is created to read as follows:

(k) No principal structure or accessory structure erected after June 1, 2009 shall be placed within ten (10) feet of a dedicated drainage easement.

SECTION 2: This ordinance shall become effective upon its passage and publication as provided by law.

Passed and approved this _____th day of June, 2009.

_____
Donald Merkes, Mayor

ATTEST:

_____
Deborah A. Galeazzi, City Clerk